Resawing on the Band Saw: **Perfect Results *Every Time!***

The Lowdown on Belt Sanders: What You Need to Know

Woodsmith®

Woodsmith.com

Vol. 32 / No. 192

DELICATE DOVETAILS MADE EASY

ALL NEW!

Classic Heirloom Chest of Drawers

3 Headboard Designs: Simple Pocket Hole Joinery

PLUS: Weekend Projects!

- **Handy Chisel Rack**
- **Beautiful Bevel Frame Mirror**

A Publication of August Home Publishing

Table of Contents

from our readers
Tips & Techniques 4

all about
Hot-Glue Guns 8
Not for woodworking? You'll find that this inexpensive tool has loads of uses in the shop.

tools of the trade
Choosing a Belt Sander 10
Every shop needs this indispensable tool. We'll get you up to speed on what to look for.

jigs and fixtures
Routing Miniature Dovetails 12
This pint-sized dovetail kit offers the same precision and ease of use as its big brother.

working with tools
Resawing on the Band Saw 14
We'll share the secret of turning thick stock into smooth, accurately sized, thin workpieces.

tips from our shop
Shop Notebook 30

woodworking technique
Woodsmith GO ONLINE EXTRAS
Making Ogee Bracket Feet 42
Don't let all the curves fool you. A simple, step-by-step approach gets the job done easily.

finishing room
Food-Safe Finishes 46
When food comes into contact with a finish, don't take chances. We'll show you what works.

details of craftsmanship
Cock Beaded Drawers 48
Learn a centuries-old technique for adding this stylish detail to your traditional projects.

in the mailbox
Q & A 50

hardware and supplies
Sources 51

Chisel Rack page 16

Mirror Frame page 20

Frame & Panel Headboards page 24

projects

shop project

Wall-Mounted Chisel Rack 16

Your chisels have never had it so good. This stylish, easy-to-build rack will keep your set close at hand, yet out of harm's way.

weekend project

Mirror Frame 20

A combination of no-fuss construction and a clean, contemporary look add up to a great way to spend some time in the shop.

designer series project DESIGNER'S NOTEBOOK

Frame & Panel Headboard 24

Variety is the spice of life — and that's what this project offers. Choose from three, great-looking styles that each go together in a snap.

heirloom project

Chippendale Chest 32

If you're looking for a "high-style" project that will expand your skills, this is the one for you. It's guaranteed to be a treasured heirloom.

Chippendale Chest page 32

editor's note
Sawdust

One of the things I like about woodworking is that no matter how much or how little time you have to devote to it, you can always find a project to match. This issue of *Woodsmith* is a perfect example. The heirloom project is a classic, Chippendale-style chest of drawers. It features many of the elements you'd expect in a traditional piece of furniture — ogee bracket feet, dovetailed drawer and case construction, beaded drawer openings, and drawer fronts veneered with ribbon-figure mahogany. It's the kind of project that can keep you busy for a good stretch, making the long winter a lot more bearable. And at the end of the process, you'll have quite a sense of accomplishment and a treasured heirloom.

At the opposite end of the spectrum are the other projects in this issue: a chisel rack, a mirror frame, and a simple headboard. All of these can be completed in a relatively short period of time, in some cases as little as a weekend. Building one of these projects is likely to give you a different sense of accomplishment — the kind that comes from completing a top-quality job from start to finish within a narrow time frame.

The nice thing is that each type of accomplishment offers a rewarding experience. And when you get right down to it, that's really the goal of any hobby.

Terry

STATEMENT OF OWNERSHIP, MANAGEMENT, AND CIRCULATION
(Required by 39 U.S.C. 3685)

1. Publication Title: *Woodsmith*. 2. Publication No.: 0164-4114 3. Filing Date: September 30, 2010. 4. Issue Frequency: Bimonthly. 5. No. of issues published annually: 6 (six). 6. Annual subscription price: $24.95. 7. Complete mailing address of known office of publication: 2200 Grand Avenue, Des Moines, (Polk County), Iowa 50312-5306. 8. Complete mailing address of the headquarters or general business offices of the publisher: 2200 Grand Avenue, Des Moines, (Polk County), Iowa 50312-5306. 9. Full names and complete mailing addresses of publisher, editor, and managing editor: Publisher: Donald B. Peschke, 2200 Grand Avenue, Des Moines, Iowa 50312; Managing Editor: Vincent Ancona, 2200 Grand Avenue, Des Moines, Iowa 50312. 10. Owner: August Home Publishing Company, 2200 Grand Avenue, Des Moines, Iowa 50312; Donald B. Peschke, 2200 Grand Avenue, Des Moines, Iowa 50312. 11. Known bondholders, mortgagees, and other security holders owning 1 percent or more of total amount of bonds, mortgages or other securities: None. 12. (Does not apply.) 13. Publication Title: *Woodsmith*. 14. Issue Date for Circulation Data Below: August/September 2010 15. Extent and nature of circulation:

	Average no. copies each issue during preceding 12 months	Average no. copies of single issue published nearest to filing date
A. Total number of copies (net press run)	243,748	234,643
B. Paid and/or requested circulation:		
1. Paid/requested outside-county mail subscriptions stated on Form 3541	193,744	189,147
2. Paid in-county subscriptions	0	0
3. Sales through dealers and carriers, street vendors, counter sales, and other non USPS paid distribution	14,247	12,452
4. Other classes mailed through the USPS	0	0
C. Total paid and/or requested circulation	207,991	201,599
D. Free distribution by mail, samples, complimentary, and other free copies		
1. Outside-county as stated on Form 3541	187	180
2. In-county as stated on Form 3541	0	0
3. Other classes mails through the USPS	0	0
4. Free distribution outside the mail (carriers or other means)	0	0
E. Total free distribution	187	180
F. Total distribution	208,178	201,779
G. Copies not distributed	35,570	32,864
H. Total	243,748	234,643
I. Percentage Paid and/or requested circulation	99.91%	99.91%

16. Publication of Statement of Ownership. Will be printed in the Jan. 2011 (#192) issue of this publication.
17. I certify that all information furnished on this form is true and complete. (signed) Vincent S. Ancona, Managing Editor

On occasion, we allow companies whose products and services may be of interest to you to send advertising mail to our subscribers. We are careful to choose ethical companies that have information of genuine interest to our subscribers. Most of our subscribers appreciate these materials. However, if you prefer to have your name deleted from the mailing list made available to other companies, please write to us at Woodsmith, 2200 Grand Avenue, Des Moines, IA 50312

Tips & Techniques

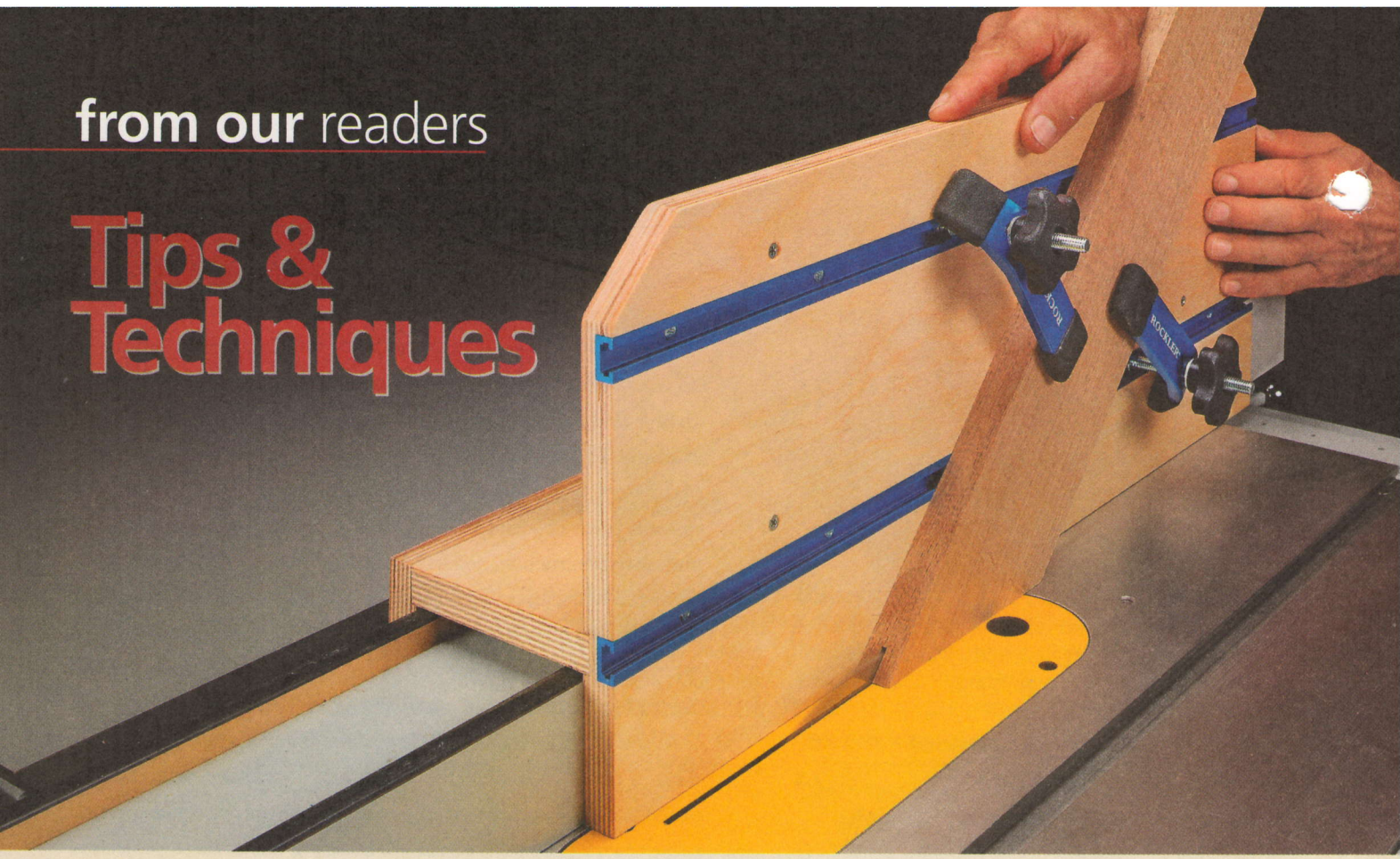

Sliding Tall Fence

There are several tasks on the table saw that are just safer to perform using a tall fence. Being able to clamp the workpiece to the fence, adds another measure of safety.

That's why I built the sliding tall fence you see in the photo above. It's sized to fit snugly over my existing rip fence, but still glide along the fence easily. I've found that this fence is a great help when cutting slots for splines (main photo), tenons, and a number of other cuts.

As you can see in the drawings below, there are a pair of T-tracks and hold downs on the face of the fence to hold a workpiece in position. Braces attached to the horizontal bracket help hold the face of the fence perfectly square to the saw table.

I provided measurements, but you'll need to size the bracket to fit the rip fence on your saw. Then it's just a matter of cutting the face to size and adding dadoes for mounting the T-track. When that's complete, you can attach the face.

Ed Meyer
Coos Bay, Oregon

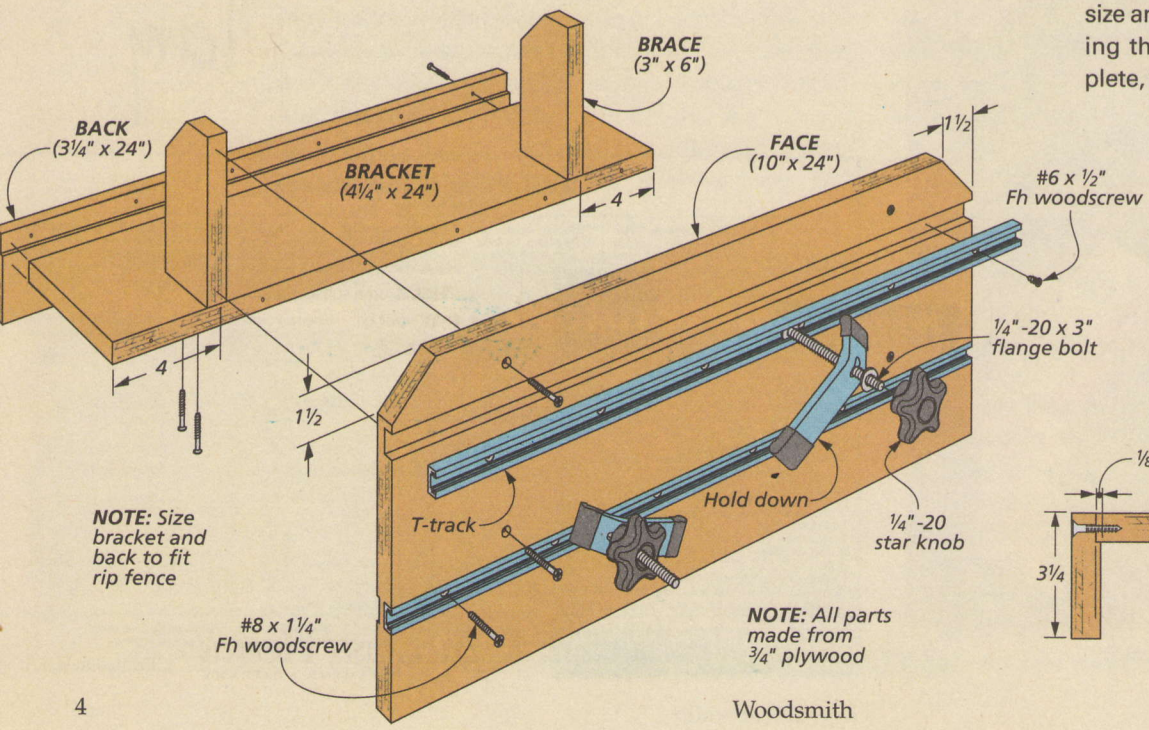

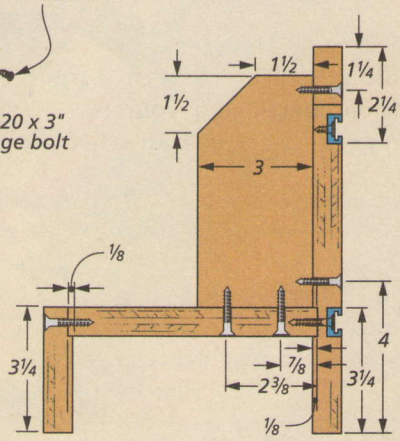

Threaded Insert Helper

I use a drill press (with the power off) to install threaded inserts. But trying to maintain pressure on the quill feed lever while turning the chuck and holding onto the workpiece almost requires three hands. So instead, I use my foot.

I tied a cord around one handle and put a loop in the end of it. To lower the chuck, I insert my foot in the loop and step down. Then I can use my right hand to turn the chuck and thread the insert into the workpiece. This leaves my left hand free to hold the workpiece in place on the drill press table. And I have a clear view of the work.

Roger Tumbleson
Lake Havasu City, Arizona

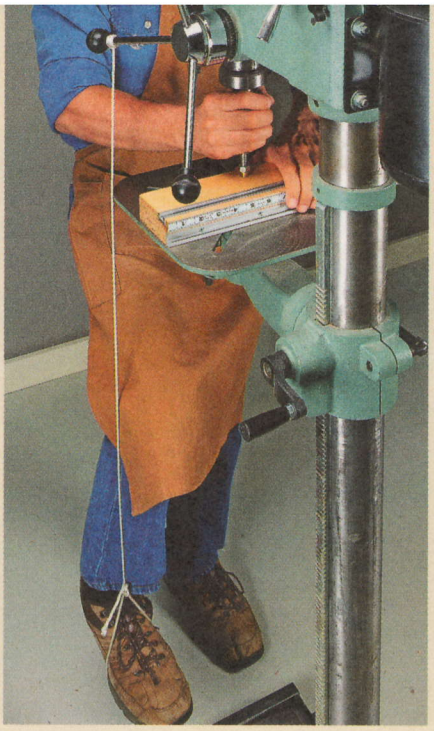

Perfect 30° Bevels

Positioning a blade in a honing guide is a tricky task. I never know if I truly have it installed at the proper angle. But I found a quick way to set the angle of the honing guide at 30° based on some simple geometry. And all you need is a ruler.

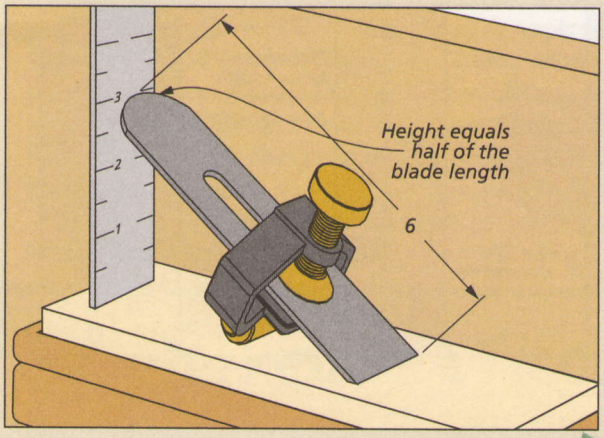

As you can see in the drawing at left, you just measure the length of your plane iron and divide it in half to figure how high the blade should sit in the honing guide. This will give you an angle of 30°.

For example, if your plane iron is 6" long, then position the blade so that the end is 3" above the surface of your sharpening stone.

It's a quick, fool-proof way to set a plane iron for sharpening.

Bill Wells
Olympia, Washington

SUBMIT YOUR TIPS ONLINE

If you have an original shop tip, we would like to hear from you and consider publishing your tip in one or more of our publications. Go to:

Woodsmith.com
Click on the link,
"SUBMIT A TIP"

You'll be able to tell us all about your tip and upload your photos and drawings. You can also mail your tips to *"Woodsmith Tips"* at the editorial address shown at right. We will pay up to $200 if we publish your tip.

FREE TIPS BY EMAIL

Now you can have the best, time-saving secrets, solutions, and techniques sent directly to your email inbox. Just go to **Woodsmith.com** and click on *"Sign Up for Free E-Tips."* You'll receive one of our favorite tips each week.

Woodsmith®

No. 192 December/January 2011

PUBLISHER Donald B. Peschke

EDITOR Terry J. Strohman
MANAGING EDITOR Vincent Ancona
SENIOR EDITOR Ted Raife
ASSOCIATE EDITOR Dennis Perkins
ASSISTANT EDITOR Carol Beronich
CONTRIBUTING EDITORS Bryan Nelson, Phil Huber, Randall A. Maxey

EXECUTIVE ART DIRECTOR Todd Lambirth
SENIOR ILLUSTRATORS David Kreyling, Harlan V. Clark
SENIOR GRAPHIC DESIGNER Bob Zimmerman
GRAPHIC DESIGNER Shelley Cronin
GRAPHIC DESIGN INTERN Megan Hann
CONTRIBUTING ILLUSTRATORS Dirk Ver Steeg, Peter J. Larson, David Kallemyn, Erich Lage

CREATIVE DIRECTOR Ted Kralicek
SENIOR PROJECT DESIGNERS Ken Munkel, Kent Welsh, Chris Fitch, Jim Downing, Mike Donovan
PROJECT DESIGNER/BUILDER John Doyle
SHOP CRAFTSMEN Steve Curtis, Steve Johnson
SENIOR PHOTOGRAPHERS Crayola England, Dennis Kennedy
ASSOCIATE STYLE DIRECTOR Rebecca Cunningham
SENIOR ELECTRONIC IMAGE SPECIALIST Allan Ruhnke
PRODUCTION ASSISTANT Minniette Johnson
VIDEO EDITOR/DIRECTOR Mark Hayes, Nate Gruca

Woodsmith® (ISSN 0164-4114) is published bimonthly by August Home Publishing Company, 2200 Grand Ave, Des Moines, IA 50312.
Woodsmith® is a registered trademark of August Home Publishing.

Copyright© 2010 August Home Publishing Company. All rights reserved.

Subscriptions: Single copy: $4.95.
Canadian Subscriptions: Canada Post Agreement No. 40038201. Send change of address information to PO Box 881, Station Main, Markham, ON L3P 8M6.
Canada BN 84597 5473 RT
Periodicals Postage Paid at Des Moines, IA, and at additional offices.
Postmaster: Send change of address to *Woodsmith*, Box 37106, Boone, IA 50037-0106.

WoodsmithCustomerService.com

ONLINE SUBSCRIBER SERVICES

- **VIEW** your account information
- **RENEW** your subscription
- **CHECK** on a subscription payment
- **PAY** your bill
- **CHANGE** your mailing or e-mail address
- **VIEW/RENEW** your gift subscriptions
- **TELL US** if you've missed an issue

CUSTOMER SERVICE Phone: 800-333-5075

SUBSCRIPTIONS
Customer Service
P.O. Box 842
Des Moines, IA 50304-9961
subscriptions@augusthome.com

EDITORIAL
Woodsmith Magazine
2200 Grand Avenue
Des Moines, IA 50312
woodsmith@woodsmith.com

AUGUST HOME PUBLISHING COMPANY

Printed in U.S.A.

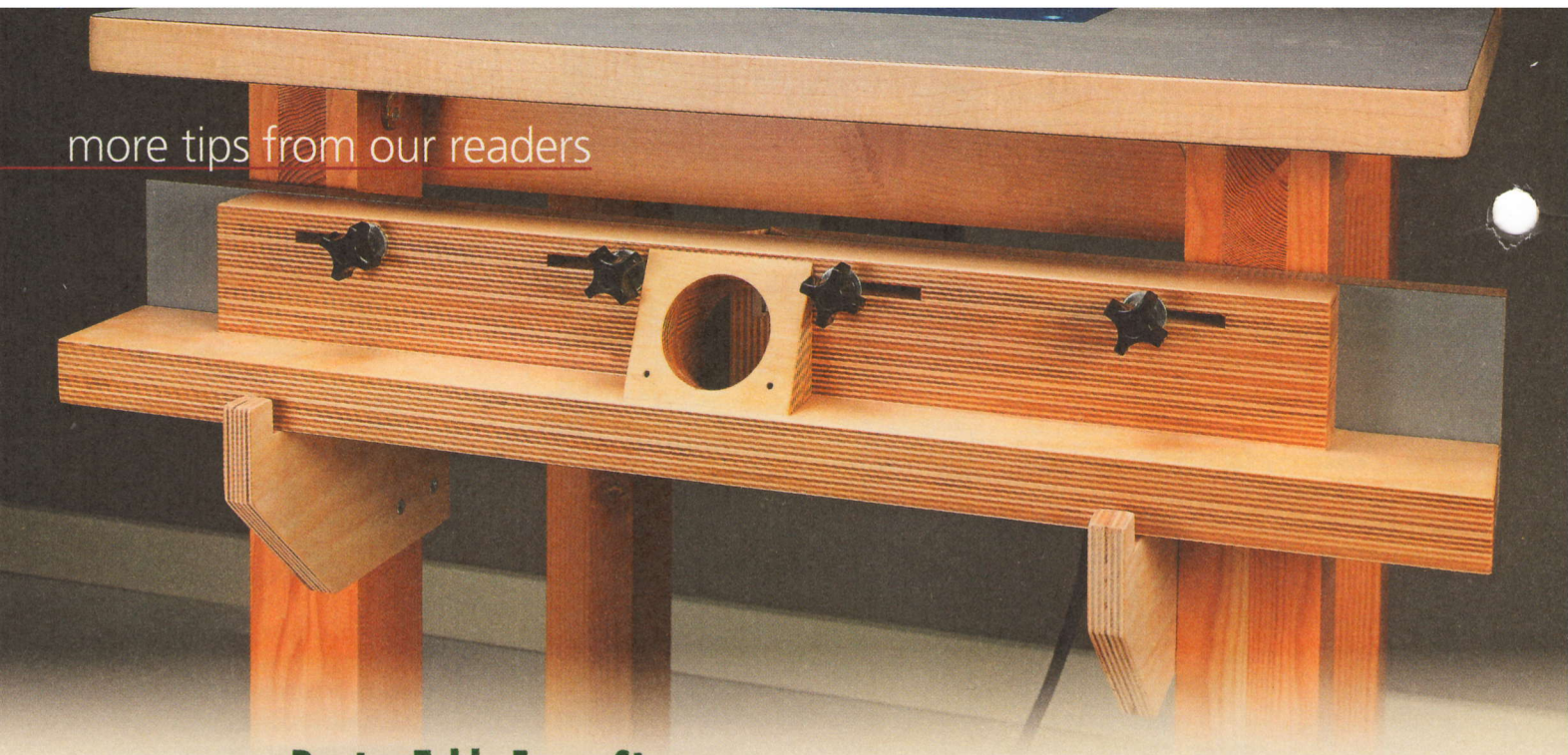

Router Table Fence Storage

Occasionally I use my router table without the fence. But I never had a place to store the fence, so it ended up on my workbench or leaning precariously against the side of the router table.

The two brackets you see in the photo above solved the problem. The brackets are made of plywood. I cut them to fit my router table, taking the width of the legs and the size of the fence into consideration (left detail drawing). Then I attached them to the legs of my router table with four woodscrews.

Lowell Heintz
North St. Paul, Minnesota

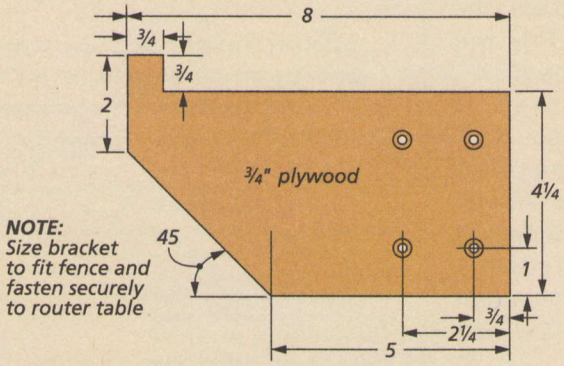

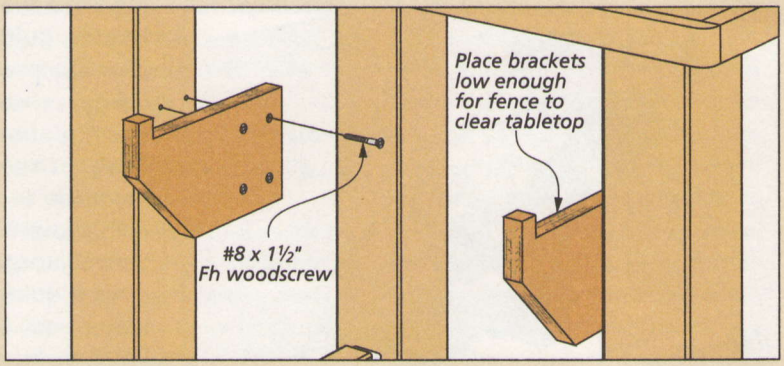

Handy Tape Measure Bracket

A tape measure can be an elusive tool in the shop. It always seems I'm laying mine down somewhere and then I can't find it.

I solved the problem by making a storage bracket from a strip of aluminum and a couple spacer blocks, like you see here.

Now I know my tape measure will always be within easy reach.

Delbert White
Rodeo, California

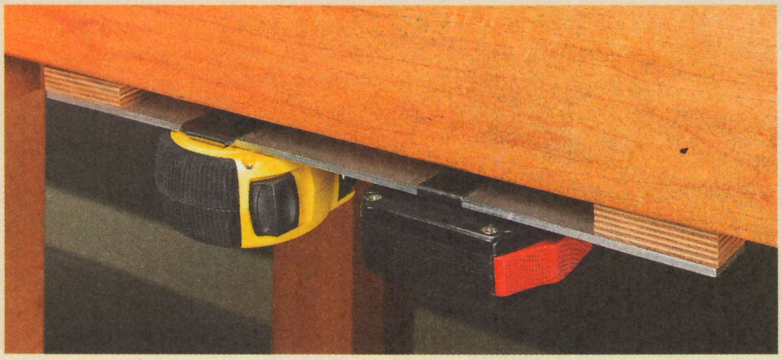

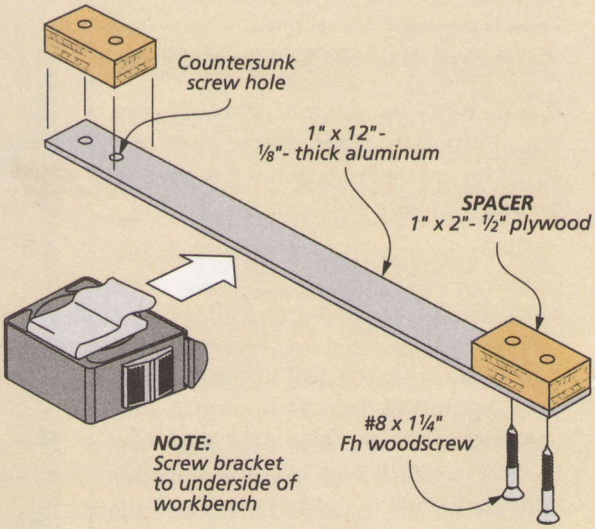

Back Saw Guide

I make a lot of boxes with decorative splined miters. And I like to cut the slots for the splines with a back saw. But holding the saw perfectly vertical while making the cut is difficult. And with a thin blade, there's a chance the saw could wobble.

So I built the simple jig you see in the photo at right. It's just two pieces of plywood joined at 90°. A rabbet in one piece ensures a 90° angle on the jig.

I added a couple kerfs cut carefully at different depths with the back saw. You can see how the two pieces are joined in the drawing below.

To use the jig, just place it on the corner of the project and make a cut. A piece of double-sided tape holds the jig in place and helps prevent tearout.

I cut the kerfs at two different depths. The kerf can act as a stop for the saw so that each slot is cut to exactly the same depth. Or with this one jig you can vary the depth of the kerfs for a decorative look.

With this jig, my worries of irregular cuts are over.

Alejandro Balbis
Longueuil, Quebec

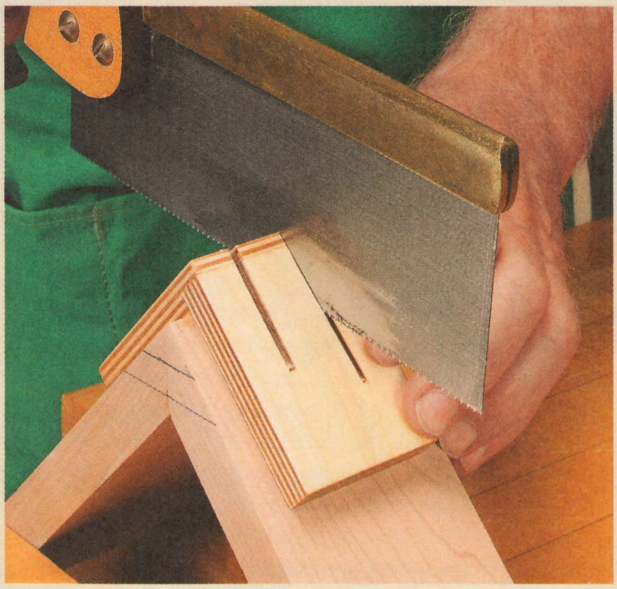

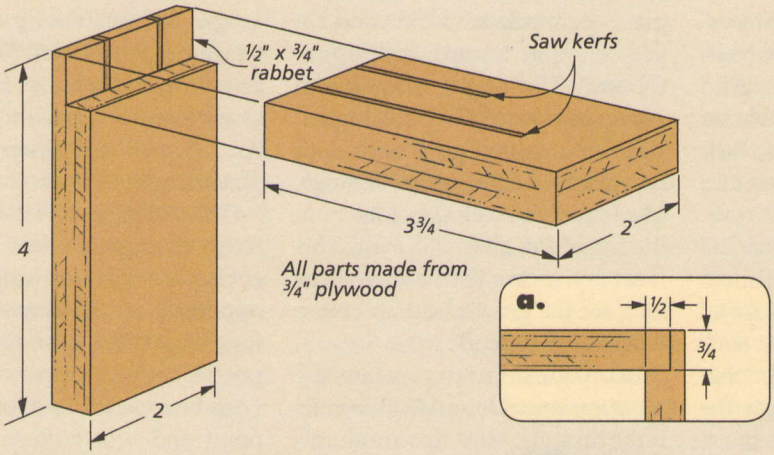

Win This Bosch Impactor Driver

That's right, send us your favorite shop tips. If your tip or technique is selected as the featured reader's tip, you'll win a *Bosch* impact driver just like the one shown here. To submit your tip or technique, just go online to *woodsmith.com* and click on the link, "SUBMIT A TIP." You can submit your tip and upload your photos for consideration.

The Winner!

Congratulations to Ed Meyer, winner of the *Bosch Impactor* driver. To find out how you could win a *Bosch* driver, check out the information on the left.

Quick Tips

WORKBENCHES ON WHEELS

I'm a tall person so the average height of a workbench is usually too low for me. This eventually results in an aching back.

Rather than modifying plans for a workbench, I hit upon an option that would make my bench higher and mobile at the same time. I added heavy-duty 5" locking casters to the legs. The casters lock tight so the bench doesn't roll around and they add just enough height to the bench to make it comfortable to work at.

Now I don't have any more backaches from leaning over a low bench. And I can move the bench anywhere I need to in the shop. As a bonus, the extra height makes it a perfect outfeed table.

Buzz Brown
St. Louis, Missouri

KEEP CLAMP PADS IN PLACE

I have soft rubber clamp pads for some of my clamps. But they never seem to stay put. They'll come loose during clamp ups or else shift on the workpiece.

To solve the problem, I added a few drops of hot glue to the pad and the clamp. Now they stay put. If I need to remove them for any reason, I can reheat the glue and reglue them later.

Cory Hoehn
Jeffersonville, Indiana

RUST-PROOF HANGERS

When finishing small parts, I often hang them to dry using pieces of wire. But I discovered that I had to be careful about rust.

To avoid any rust stains on my workpieces, I use spare lengths of 12-gauge solid copper wire. You can strip the insulation from the wire and this will give you a lightweight, bendable, rust-free hanger that can be used over and over.

Peter Sherrill
Forestville, Wisconsin

fast & easy Hot-Glue Guns

If you think glue guns are only useful for craft projects, you'll be surprised to learn several ways to put this overlooked tool to use.

Mention hot glue guns to a group of woodworkers and you're likely to get some raised eyebrows. That's because glue guns are often thought of as "craft" tools. And while they may not be suitable for actual assembly of projects, they still have a number of uses in a woodworking shop.

HOW THEY WORK. Glue guns are generally pretty simple tools. An electrical current heats the metal tip of the gun which melts a stick of glue. Most have a trigger that pushes a glue stick through the gun. Hot glue is dispensed, but it cools and sets up within seconds.

WATTAGE & TEMPERATURE. When selecting a glue gun, you'll find a wide range of temperatures and wattages to choose from. Low-temp guns operate around 250°, and are geared more toward craft applications. The high temperature guns operate at 370° and higher. You can also find guns with dual or variable temperature settings. The higher the wattage of the gun, the faster the glue will melt. This means you don't have to wait as long for the gun to heat up before you can get to work.

TIPS. Aside from temperature, the other variance I found in glue guns is the tip style. Most tips are aluminum, but there are a few guns that have a replaceable brass tip (right photo, below). This could be an advantage if you want to spend a little extra for a gun that will last longer. A fine-point tip could also be useful (left photo). The smaller tip allows the glue to be applied in very small drops or thin lines. And it makes it easier to apply glue in tight corners.

TYPES OF GLUE. Just as there are different glue guns, there are different types of glue too (upper photo, opposite page). The most common type of glue is a clear, general purpose. It's used a lot in craft applications because it has a low melting point and won't damage fragile materials like paper or cloth.

High-temperature glue sticks will only melt at temperatures over 350°.

Surebonder Fine Tip ($15) — *Stanley GR20K ($12)* — *Surebonder DT-280 ($17)* — *Ad-Tech Pro-200 ($62)*

They have greater holding power than the low temperature glues, and a slightly longer open working time. They're a better choice for gluing hard surface materials like wood, metal, and ceramic.

There are also glue sticks designed specifically for use on wood. This glue has a lower viscosity than other types of hot glue, so it penetrates into the pores of the wood for better grabbing power. It's also tinted to be less noticeable.

CLAMPING. The task I use hot glue for the most is clamping. For example, a couple of dabs of hot glue on the ends of a curved workpiece that otherwise couldn't be clamped tight, will hold the workpiece in place while the conventional wood glue dries.

NON-WOOD MATERIALS. Hot glue is also good for gluing non-wood materials to a project. For example, I use hot glue for gluing felt or leather to the bottom of drawers or boxes. You can use general purpose glue with tacks or staples to hold fabric, batting, and foam (lower left photo).

TEMPORARY HOLD. You can also use hot glue when you need a fast, temporary hold. I use it for quickly attaching templates and stop blocks, or to hold a hinge in place while drilling screw holes (main photo). All it takes is a drop of glue about the size of the head of a pin. To break the hold, just give it a sideways rap with a mallet.

A glue gun is easy and quick. Best of all, you can buy a basic gun for just a few dollars. While it may not be the most used tool in your shop, it's still convenient to have around when the need arises. W

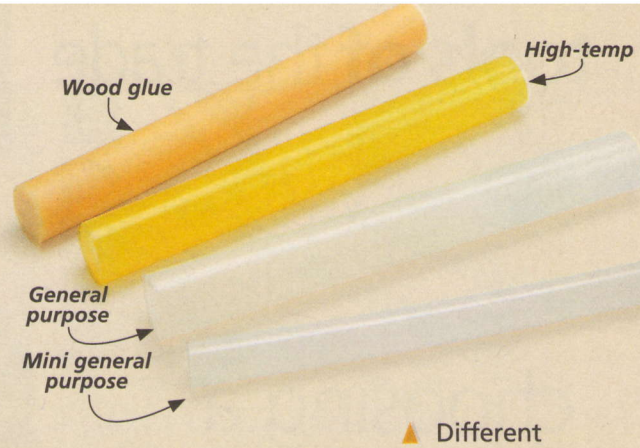

▲ Different glue sticks are available to suit specific tasks and materials.

▲ Hot glue will bond dissimilar materials, such as polyester batting to plywood.

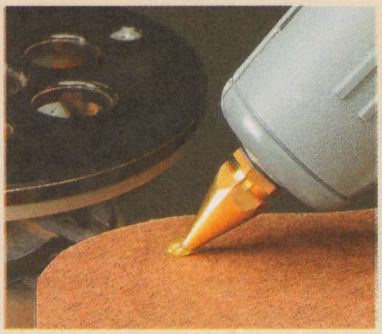

▲ A few dots of hot glue holds a routing template firmly in place, and is easily removed.

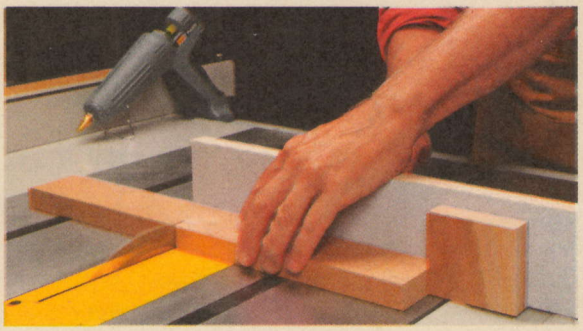

▲ Using hot glue to attach a stop block to a fence provides a solid, temporary joint without the need for cumbersome clamps.

Worth a Look: *TiteBond* HiPURformer

The glue guns shown above all use traditional glue sticks. But there's a fairly new type of glue gun that dispenses polyurethane glue. The glue for *TiteBond's HiPURformer* gun comes in a cartridge. The gun has a heating element inside that surrounds the tube of glue with heat supplied from a corded heating stand. In about 15 minutes, the glue in the cordless gun is ready to use.

▲ The cordless feature of the *HiPURformer* glue gun allows you to bring the adhesive to the job at hand.

The polyurethane glue is similar to the glue that is sold in bottles. But the heat from the gun means you don't have to activate it with water and you don't have the bubbly squeezeout to clean up.

PERMANENT BOND. The reason this polyurethane glue doesn't need water to activate it is because the adhesive reacts with the moisture in the wood to form an extremely strong chemical and mechanical bond. The adhesive penetrates the wood and creates a "chain" with the substrate and adhesive to make a bond.

SETUP TIME. Four types of glue are available with set-up times from 30 seconds to five minutes. The longer time allows you to fine-tune the joint alignment.

WOOD TO WOOD. All the glue formulas will bond wood to wood and other common materials like plastic, leather, and fabric. And the glue is water resistant and weatherproof, so you can use it for outdoor projects as well.

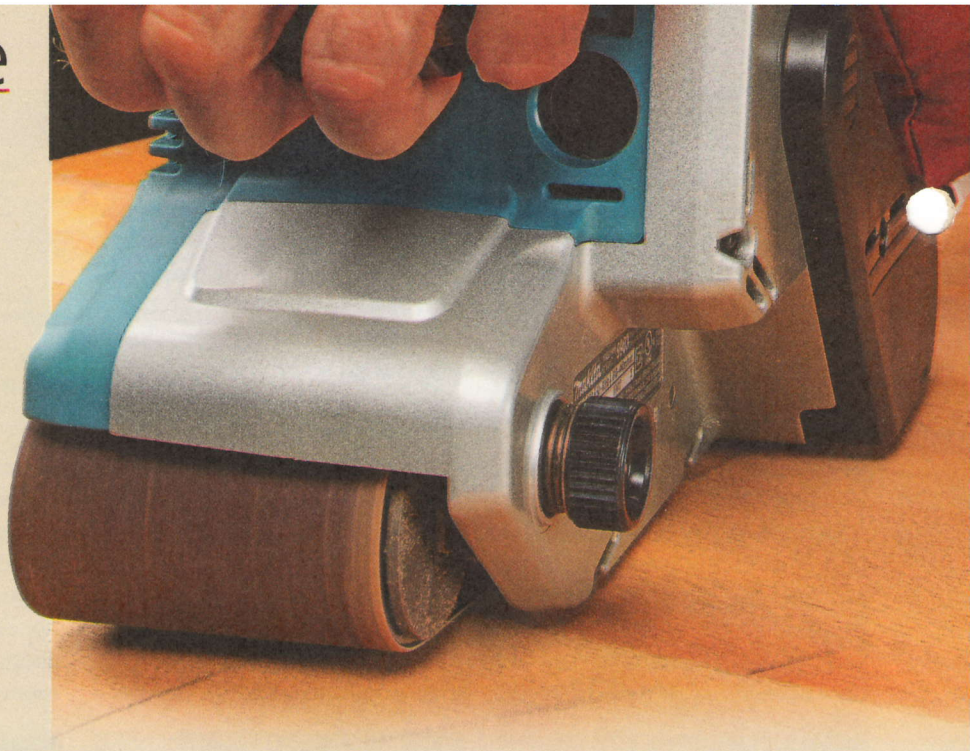

choosing a Belt Sander

Here are the key features and capabilities to look for when it's time to buy or upgrade this essential shop tool.

When you need to remove a lot of material in a short time, a belt sander is your go-to tool. Whether you're in the market for your first belt sander or thinking about replacing one that you've had for awhile, there are a few things to think about before you do.

Several factors enter into choosing the right belt sander. To start with, I look at some primary features, such as size, overall design, and ruggedness of construction. Then I decide on some subjective features, such as variable speed options, dust collection and finally how the tool feels in my hands in use.

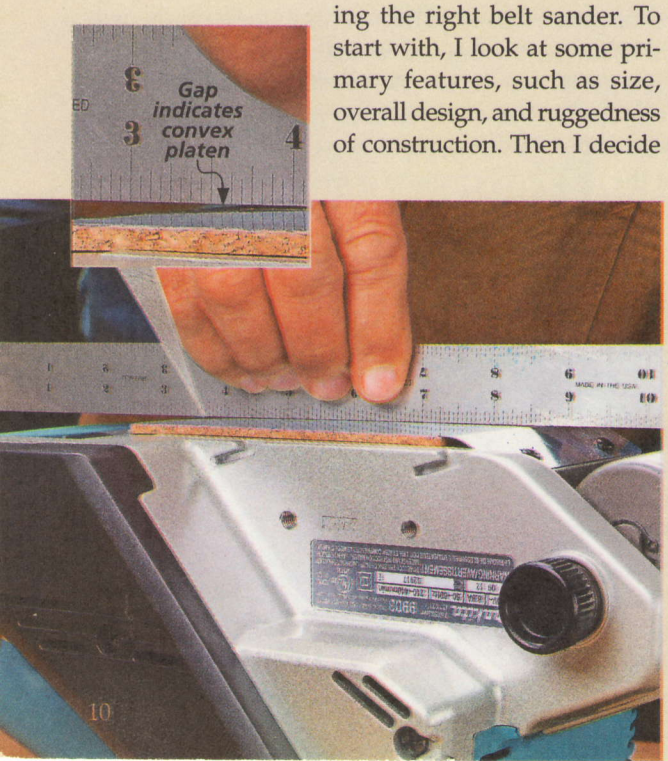

A warped or buckled metal platen can cause uneven sanding.

SIZE. The size of a belt sander is measured by the width and length of the belt. Belts range in size from small, detail-type sanders with belts that are only an inch or two wide to heavy-duty 4" x 24" machines. A common size for home shop use is a 3" x 21" sander. This size offers a sizeable sanding area, without the fatigue generated by running a large machine. I think you'll find it can handle most tasks in the shop.

PLATEN. The main advantage of a belt sander is the speed as which it removes stock. And key to keeping a surface flat during this aggressive stock removal is the platen. The platen on a belt sander is the plate on the bottom of the sander that comes in contact with the workpiece. It should be perfectly flat so that the sander doesn't create a wavy surface. There are two types of platens available — metal and graphite. Metal platens are thin and often warped or buckled, even on new sanders (left photo). Graphite platens are less likely to warp and can be an advantage over metal. If you want to upgrade your existing sander by adding a graphite platen, take a look at the box on the opposite page.

TRACKING. In order for the belt to track properly and stay centered on the platen, the front and rear rollers on a sander need to be perfectly aligned. If they're out of alignment, the belt can rub against the housing and damage both the belt and possibly the sander too. Or the belt could run off the machine entirely.

Some sanders advertise an auto-tracking feature to help keep the belt centered on the platen. But you may still need to make adjustments manually after you change the belt on the sander.

A thumbscrew knob near the front roller will help you adjust the tracking position of the belt. It moves the forward roller from side to side to adjust the alignment of the front and back rollers.

When you're shopping for a sander, look for a tracking knob that moves the roller gradually so that you can fine-tune the tracking.

VARIABLE SPEED. A belt sander excels at removing a lot of material at high speed. But you should also be able to use your sander to do controlled sanding. That's when a variable speed motor can be helpful. All you need to do to make the adjustment is dial down the speed control, as shown in the lower center photo.

DUST COLLECTION. A belt sander can fill the air in your shop with fine dust in a matter of seconds. That's why I place good dust collection capability near the top of the list of necessary features when I'm comparing sanders. The small bags included with most sanders will only trap some of the dust. So it pays to look for a sander that includes a dust port or an adapter that will fit your vacuum or dust collector.

ERGONOMICS. Even a medium-sized 3" x 21" belt sander can take a lot of effort to keep under control. So it's important that the tool fits your hands comfortably. Well placed handles reduce fatigue during heavy use. Some sanders, like the one in the top photos have dual-position handles. This lets you change the handle to a position that fits your work stance.

There are a variety of belt sanders on the market. And it can get confusing trying to find one with all the options you want. But with these guidelines, you should be able to find one for your shop. W

▲ Dual handle positions on some sanders allow you to adjust the way you hold the tool.

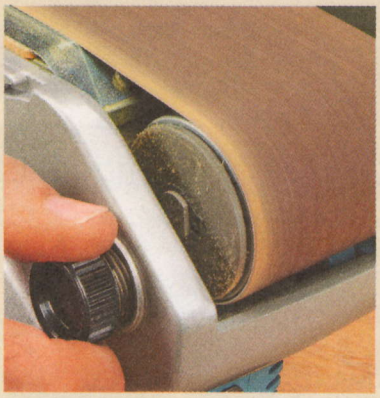

▲ The tracking knob lets you align the two rollers and center the belt on the sander.

▲ Variable speed sanders control the pace of stock removal for smoother results.

▲ Most belt sanders allow you to attach a shop vacuum for better dust collection.

Sander Upgrade: Graphite Platen

Replacing the thin, flimsy metal platen on your belt sander with a graphite platen helps you create flatter surfaces. It also keeps your sanding belts running cooler with less friction. And that means longer life for all your belts.

Graphite is a form of carbon that's smooth, tough, and stands up well to high temperatures without warping or buckling. Because it dissipates heat so well, it makes a good replacement for a belt sander platen (see sources on page 51).

The graphite platen material comes in rolls and is simply cut to length with a utility knife, as shown in the right photo. You can use the original metal platen as a template to lay out the screw holes in the graphite platen. Then just attach it to your machine.

With a graphite platen upgrade, you'll see right away that your sander will run cooler and belts won't wear as quickly from the heat generated by sanding. Plus, you'll get a more even sanding surface.

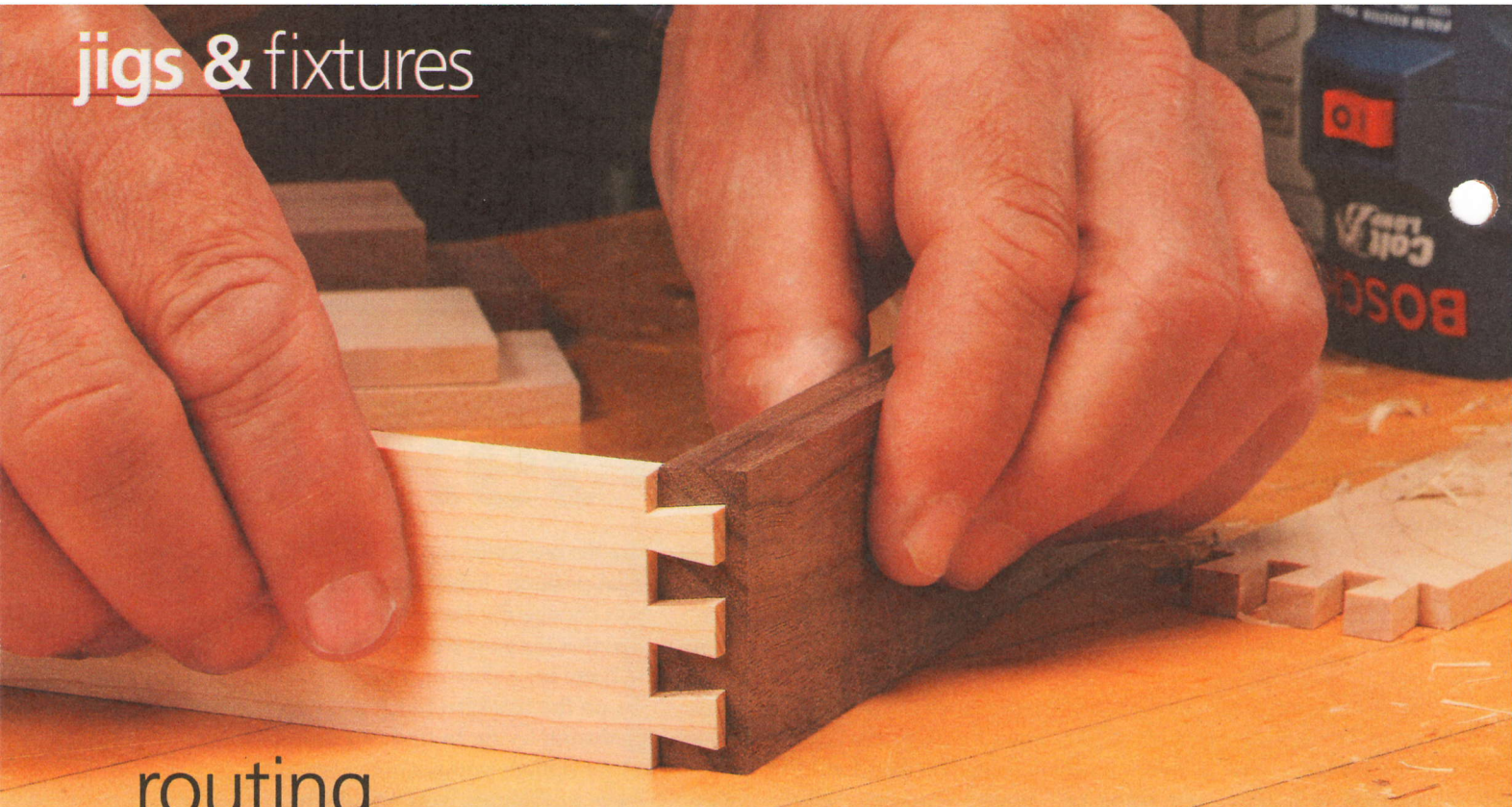

routing

Miniature Dovetails

Small-scale dovetails are a breeze with the right jig, templates, and bits. *Porter-Cable's* kit contains everything you need for a small project.

A dovetail jig makes routing dovetails for drawers and cabinets a simple operation. But what do you do when you want to make small drawers for a jewelry box or other projects? After all, it's often these smaller projects that really benefit from that kind of detail.

Until recently, none of the conventional dovetail jigs offered a solution, leaving hand cutting of small dovetails as the only option. So when *Porter-Cable* developed a miniature dovetail template for their popular *4200* series jig, I couldn't wait to give it a try. And I'm very pleased with the results.

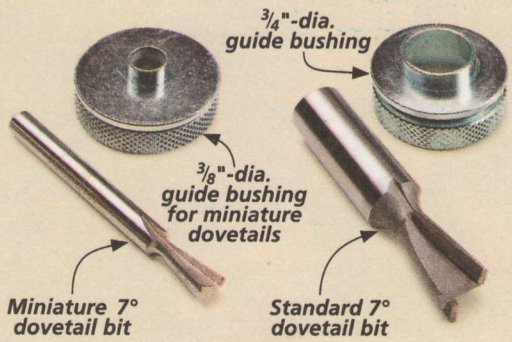

▼ The bit used with the minature dovetail template is roughly half the size of a conventional dovetail bit.

HOW SMALL? Before going any further, let me take a moment to define what I mean by "miniature." The jig allows you to make dovetails in stock as thin as 1/8". The length of the pieces needs to be at least 5" in order to be held securely by the clamps on the front and top of the jig. As for the minimum width, if you really want to push the limits, you could go all the way down to a 5/8"-tall drawer that features a single tail on each corner.

WHAT'S IN THE BOX. There are several versions of the *Porter-Cable* jig. To buy the full kit with the miniature capability, look for the *4216*. But if you already have a *Porter-Cable 4200* series jig, you can buy the miniature package on its own. Sources on page 51 has the details.

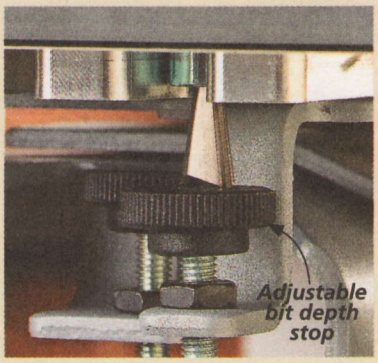

▲ An adjustable depth stop makes setting the bit height nearly foolproof.

The miniature kit includes a template for routing both half-blind and through dovetails, small dovetail and straight bits, and a guide bushing. You also get a pair of replacement alignment plates for routing half-blind joints.

HOW IT WORKS. The nice thing about using the jig for miniature work is that there's not much of a

learning curve. Everything works on the same principles used for cutting normal-size dovetails, just on a smaller scale. And you can leave your big router on the shelf. A palm router has all the horsepower you need to make great-looking miniature dovetails.

STOCK PREPARATION. It's always a good idea to prepare plenty of thin stock before you get started. In addition to making all the parts for my project, I also make a couple of long test pieces. You can use these for setting up the jig and zeroing in on the bit height and spacing. By starting with extra-long pieces, you can simply cut off the ends and use them over until you get the perfect fit.

SETUP. In addition to installing the template, you'll also need to attach the smaller alignment plates (lower margin photo) The plates maintain the proper offset between the drawer side and front when routing a half-blind joint. They also register the edge of the pieces when routing through joints.

I use a piece of stock to set the position of the plate so that I'll get a joint with half pins on the drawer fronts and full tails on the sides. Taking care to center the stock will keep the spacing balanced, like the joints you see in the photos at right.

HANDY INSTRUCTIONS. Since most of us don't cut dovetails every day, it's easy to forget the process. Fortunately, the instructions for setting up and fine-tuning the fit are printed on the jig.

TECHNIQUES. The three photos at left show you the basic setup. (Use the long pieces of extra stock you prepared earlier to make test cuts.) You'll need to adjust both the bit height and template position until you have a tight-fitting joint.

For through dovetails, both pieces are routed in the upright position, secured in the front of the jig. You cut the tails first, using a dovetail bit. Then, flip the template around and switch to a straight bit to cut the pins. Half-blind dovetails are cut using the dovetail bit with both the front and side in the jig at the same time. Once you have a good fit, use the bit to set the depth stop shown in the photo on the opposite page.

These features allow you to make perfect-fitting dovetail joints quickly and easily in small projects. W

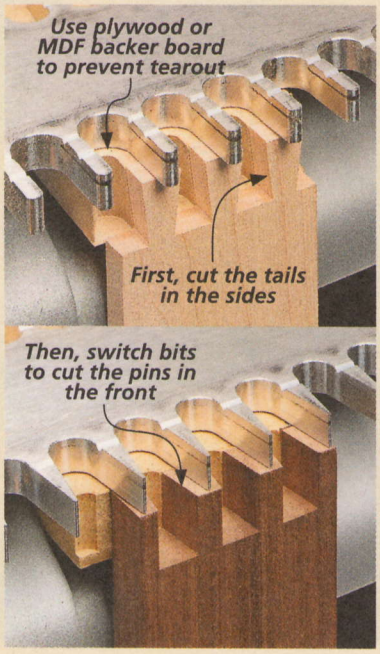

▲ For through dovetails, use a dovetail bit to rout the tails and a straight bit for the pins.

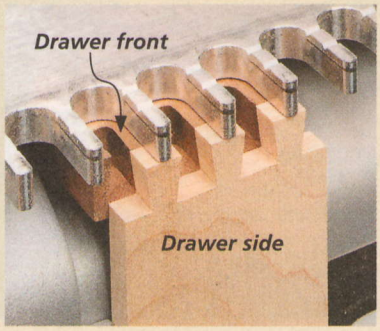

▲ For half-blind dovetails, both parts are cut at the same time using a dovetail bit.

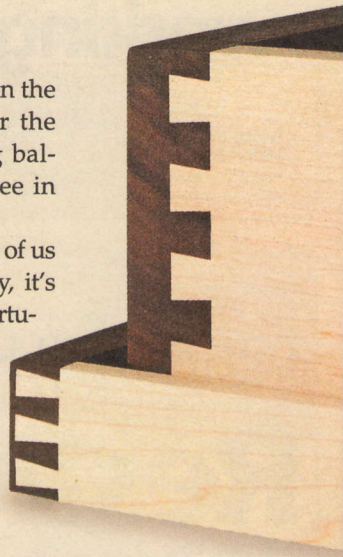

▲ Miniature dovetails are the perfect solution for small projects.

▼ The alignment plate registers the edge of the workpiece.

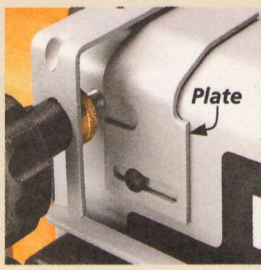

Worth a Look: *Rockler* Mini-Dovetail Kit

While most dovetail jig manufacturers have ignored the idea of miniature dovetails, *Rockler* has also made a kit for small-scale work. Shown in the photos below, the *Rockler* kit includes a ⅜"-thick phenolic template, guide bushings, a set of ⅛"-shank miniature bits and a ¼" to ⅛" collet adapter (refer to Sources on page 51).

Because there's no miniature alignment plate included to replace the standard-sized plate, the *Rockler* kit is only capable of producing through dovetails. Also, due to the small-diameter shank bits, you're limited to ⅛" to ¼"-thick stock. These limitations can be somewhat frustrating, but there is one feature I like about the *Rockler* kit.

As you can see in the photo of the template below, you have the option of spacing the dovetails either ½" or ⅝" on center. This opens up some possibilities for different drawer sizes and designs.

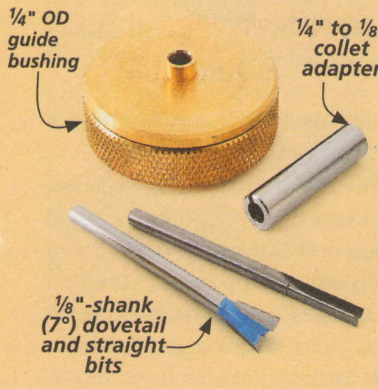

Rockler Mini-Dovetail Template

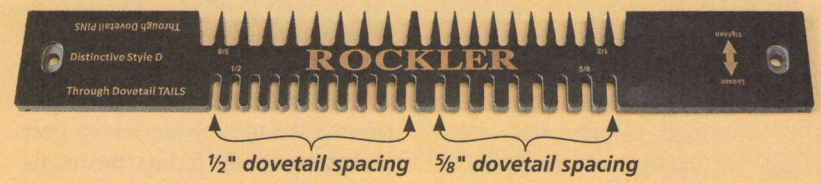

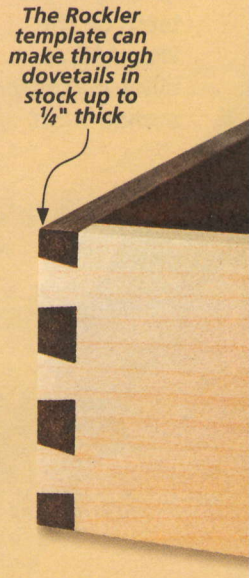

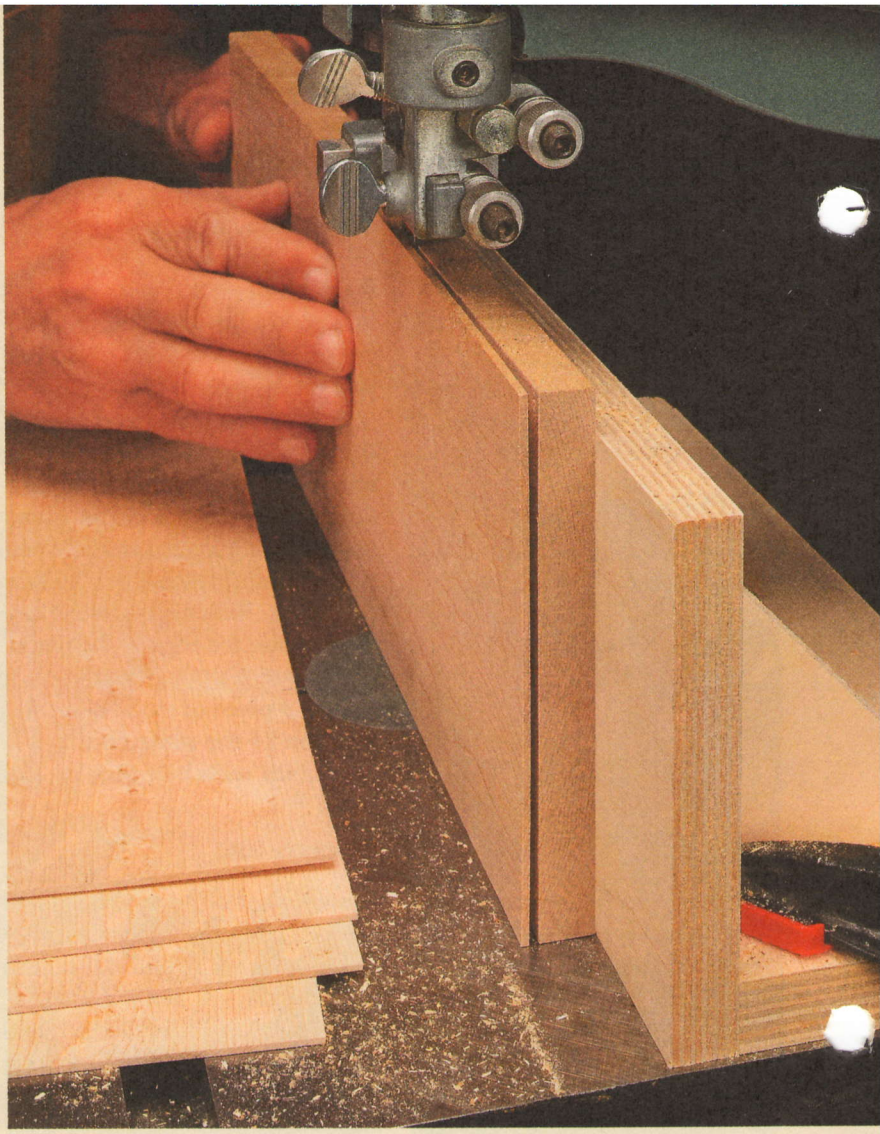

techniques for Resawing on the Band Saw

With the right blade and the right setup, you can cut stock to any thickness, and even create your own veneers.

Chances are, one day you'll take on a project that requires thin stock. It could be a box with ½"-thick sides or a chest with small drawers made from ¼" stock. A quick price check at the lumberyard (where thin stock is usually sold by the square foot) will show you how expensive it can be to buy thicknesses less than ¾".

Of course, you could always plane down thicker stock. But this method is pretty wasteful and leaves you watching a big chunk of your woodworking budget go swirling into your dust collector. That's why learning how to resaw on your band saw is a good investment of time and money.

START WITH THE RIGHT BLADE. Before you get started, there are a few things to do. The first step is to install the correct type of blade for cutting through the width of a board.

Resawing involves making rip cuts in the face of a wide board. So just like you would on the table saw, you'll want to select a blade with fewer teeth per inch (TPI) than the blades you use for crosscutting or cutting curves. For most 14" band saws, a ½"-wide blade with 2-3 TPI is a good choice.

One option is the *Wood Slicer* from *Highland Woodworking* (left margin photo). It has the right tooth count and also features a variable tooth pitch.

This means that the spacing of the teeth is irregular. It helps reduce vibration, resulting in a much smoother cut. Priced at around $25, it's a great blade for occasional resawing. (Refer to page 51 for sources.)

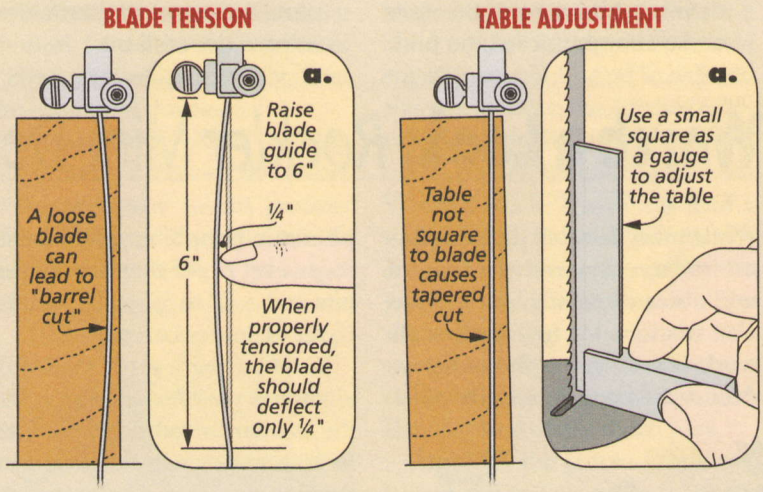

▼ The irregular spacing of the teeth on the *Wood Slicer* blade makes for a smooth cut.

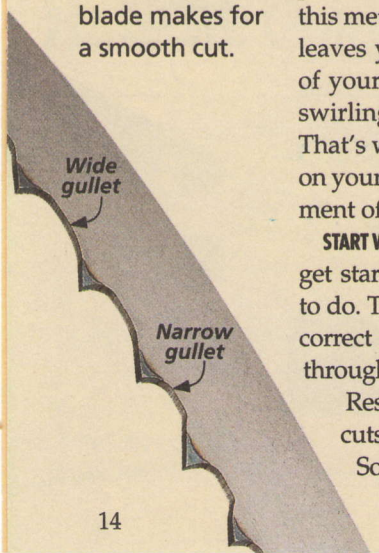

Once you've mounted the blade in your saw, you need to adjust the tension. Unfortunately, the scale on your saw isn't a very reliable indicator of how much tension the blade requires. The illustration on the opposite page shows an easy way to determine the right amount of tension. When set properly, the tension keeps the blade rigid enough to cut through a wide workpiece without it deflecting or making a barrel cut.

Finally, make sure the table is square to the blade and set the thrust bearings and guides according to the saw's instruction manual.

FENCE. One piece of equipment that's essential for getting good results when resawing is a fence. If your saw didn't come with a fence, it's easy enough to make one. Most of the time, I prefer to use a tall, flat fence like the one shown at the far right and in the main photo.

A tall, shop-made fence simply clamps to the saw table and provides support for the workpiece. This is especially important when resawing thin stock or veneer.

BLADE DRIFT. A fence alone won't necessarily guarantee a straight cut, however. Most band saw blades tend to veer slightly to the left or right when cutting. This is known as blade drift. The amount of drift varies with every blade, but you can compensate for it by clamping your fence to match the drift angle. The drawings below show you how to do this.

SINGLE-POINT FENCE. Another way to overcome blade drift is to use a single-point fence like the one shown in the left photo above and in the margin. To use a single-point fence, you simply scribe a line on the edge of the workpiece and cut on the line by pivoting the workpiece to match the angle.

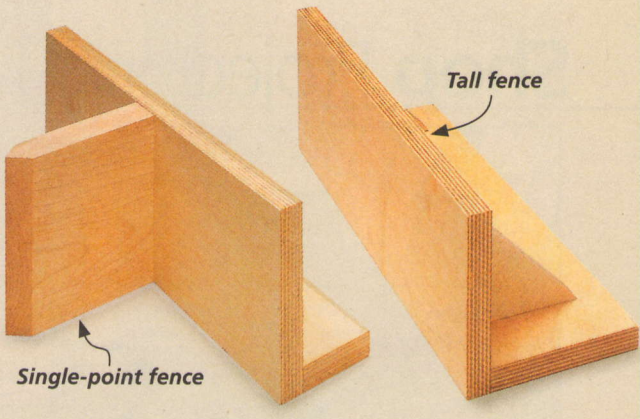

FEED RATE & TECHNIQUES. With either style of fence, your saw will help you determine the feed rate for resawing. As a rule, you should push the stock through the blade almost as fast as your saw allows without bogging down or making unusual noise. This gives you the best result and helps prevent wearing out the blade prematurely.

After making a few cuts, you'll develop a feel for the right speed. When you can no longer cut at this rate, it's a good bet the blade is getting dull. The biggest frustration with resawing is how quickly a blade becomes too dull to cut effectively. One way to get longer life is to buy a carbide-tipped blade. The box below has the details.

CUT & PLANE. To save yourself some work, it's a good idea to joint or plane the face of the workpiece between each cut. This way, you'll have a flat reference face when it's time to clean up the pieces.

Once you get the hang of resawing, it will become an indispensable skill allowing you to make the most of your lumber. W

▲ A single-point fence allows you to change the feed angle to compensate for blade drift.

SETTING THE FENCE TO COMPENSATE FOR BLADE DRIFT

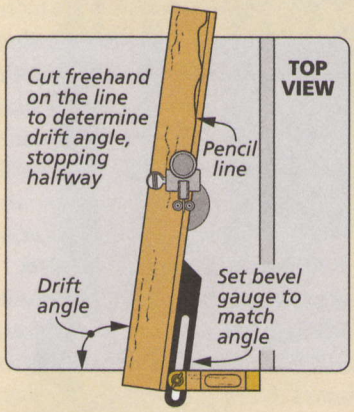

Test Piece. *Mark a line on a piece of thick stock and cut on the line to about the halfway point.*

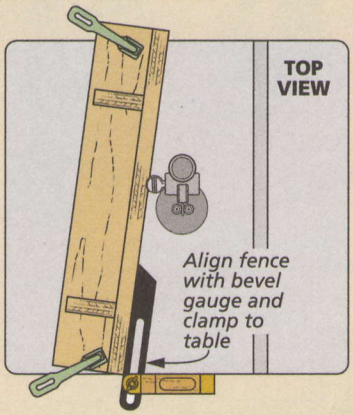

Fence. *Set the fence to match the drift angle using a bevel gauge, then clamp the fence in place.*

Upgrade: *Lenox* Carbide-Tipped Blades

Regular band saw blades are made from high-carbon or high-speed steel. These are good choices because they're flexible enough to provide a long life while bending around the wheels of the saw. And for cutting curves in thinner stock, they hold up pretty well. But when it comes to resawing, these teeth dull very quickly, often in as little as a couple hours of cutting time.

Fortunately, there's a solution — carbide teeth. By brazing small carbide teeth to the high-speed steel band, you get the best of both worlds. Of course, these blades come at a pretty steep price. The *Lenox Woodmaster CT,* shown at right costs about four times the price of the *Wood Slicer* blade but lasts about six times longer. If you do much resawing, it quickly pays for itself.

The carbide teeth on the Woodmaster CT hold up well under the stresses of resawing

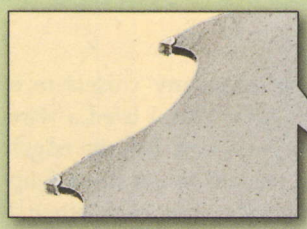

▲ Carbide teeth brazed onto a high-speed steel blade body provide the ultimate in resawing.

wall-mounted Chisel Rack

Good tools deserve a good home. This chisel rack provides convenient storage and adds a touch of class to your shop.

I used to store my chisels in a drawer. After that, I tried a wire rack on pegboard. But the edges always seemed to get dinged up from banging into each other. I finally decided to spend an afternoon building a nice, hardwood rack for them. And with this design, that's about all the time it takes.

A simple hardwood frame and panel serves as a foundation for the chisel holder. Then you add a pair of corbels, and a narrow, routed base trim. I chose oak for the rack, but you can use any hardwood you have lying around in the shop.

While this wall-mounted rack holds five chisels, it's pretty easy to expand the width to hold as many as you need. All you do is lay out the spacing on the chisel holder and adjust the width of the frame to accommodate the new size.

All in all, it's sure to be a great addition to your shop. I'm sure you'll agree that taking care of your fine tools is time well spent.

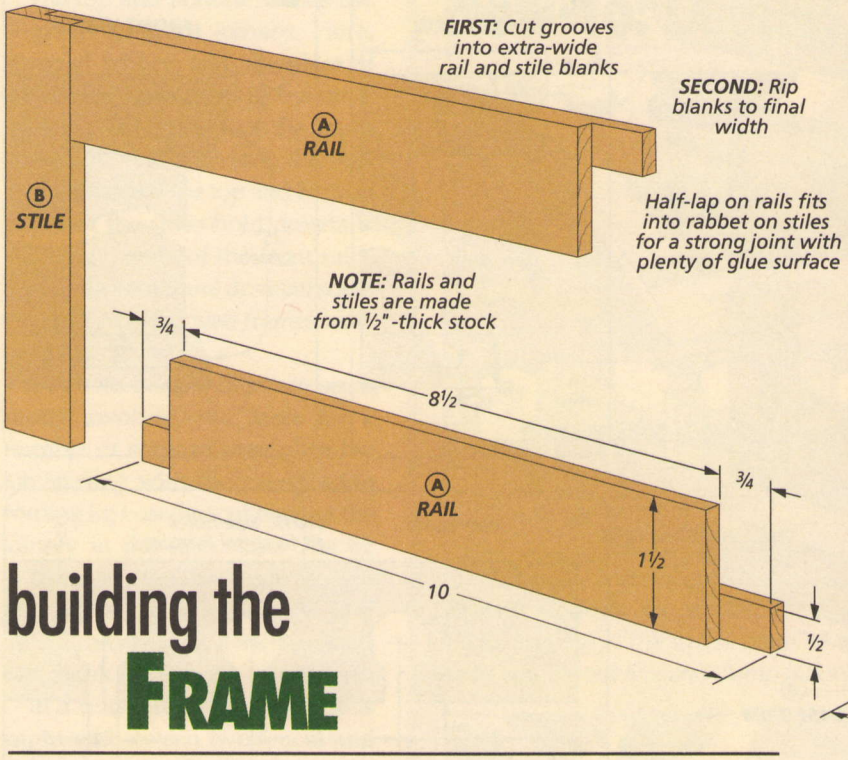

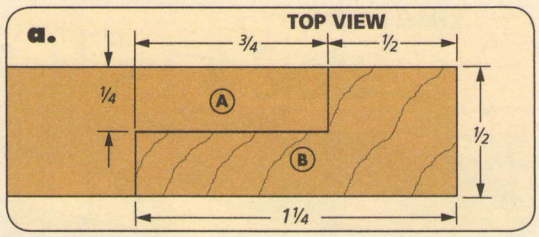

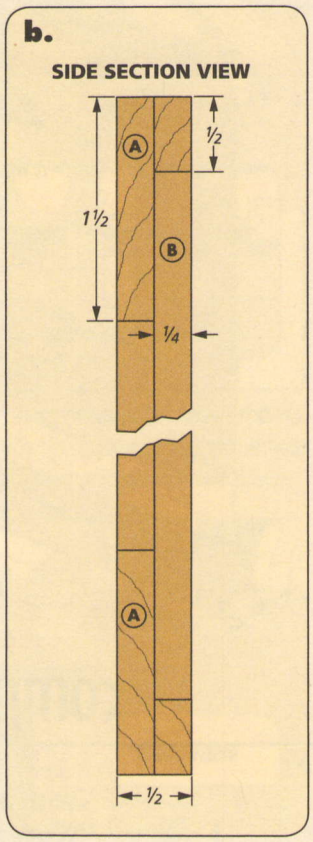

building the FRAME

The chisel rack starts with a frame. I used half-lap joints on the rails that fit into rabbets on the stiles. The rabbets on the rails and stiles form a recess that will hold the back panel you'll add later.

MAKING THE RAILS & STILES. To get started, you'll need to plane or resaw some stock to ½" thick. Once you have the stock the right thickness, the box below shows you a safe way to cut the rabbets and half-lap joints. You'll start with a pair of extra-wide blanks. By cutting each pair of rails and stiles from a single blank, you can cut the grooves that form the rabbets more easily and safely.

After installing a dado blade in the table saw, use a couple pieces of scrap to set the blade height to exactly half the thickness of the stock. Then cut the grooves in the blanks. After that, you'll need to install a single blade and cut the rails and stiles to final width.

Next, turn your attention to cutting the half-lap joints on the rails. For this, you can install the dado blade again. Then add auxiliary fences to both the miter gauge and the rip fence. The far right drawing below shows how to use the auxiliary rip fence as a stop for making the cut.

After completing the joinery cuts, assemble the frame with glue and a clamp across each joint. Check the assembly after applying the clamps to make sure it's square.

How-To: Cut the Rail & Stile Joinery

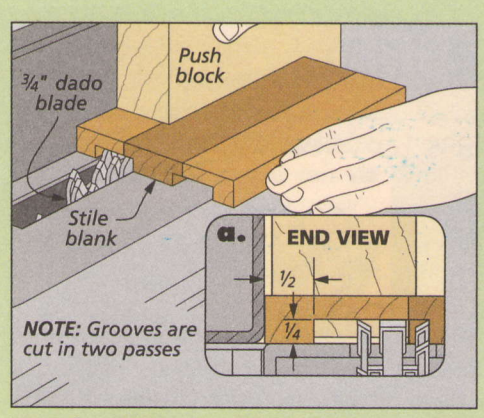

Cut the Grooves. *Starting with extra-wide blanks, make two passes on both sides to cut the wide grooves in both the rails and stiles.*

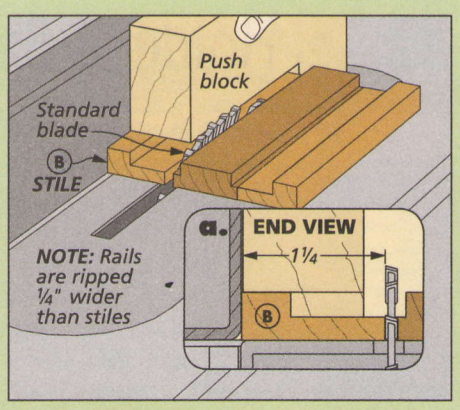

Cut to Width. *Install a standard blade and use a push block to rip the rails and stiles to their final width, forming the rabbet.*

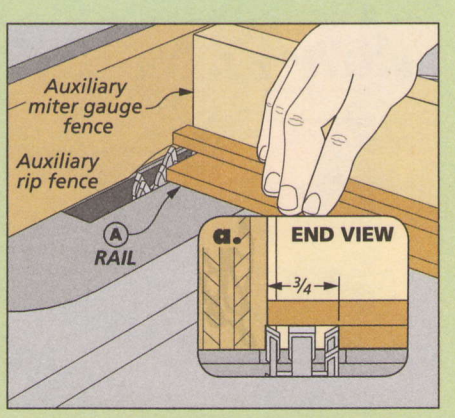

Half-Lap Joint. *With the blade buried in an auxiliary fence, use the miter gauge to cut the half-lap joints on the rails.*

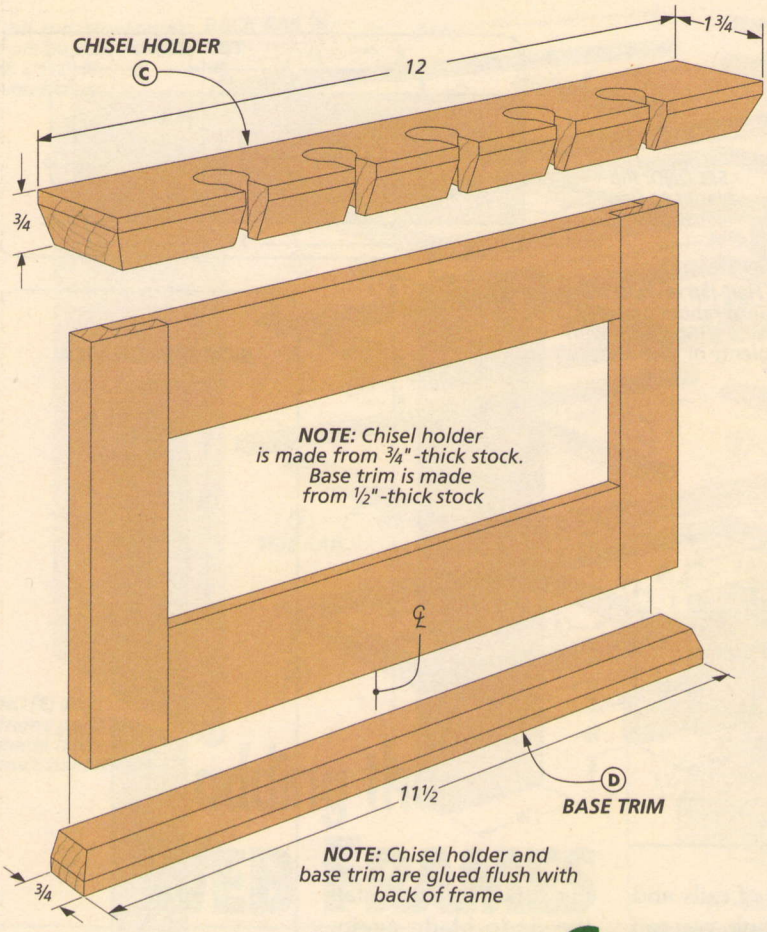

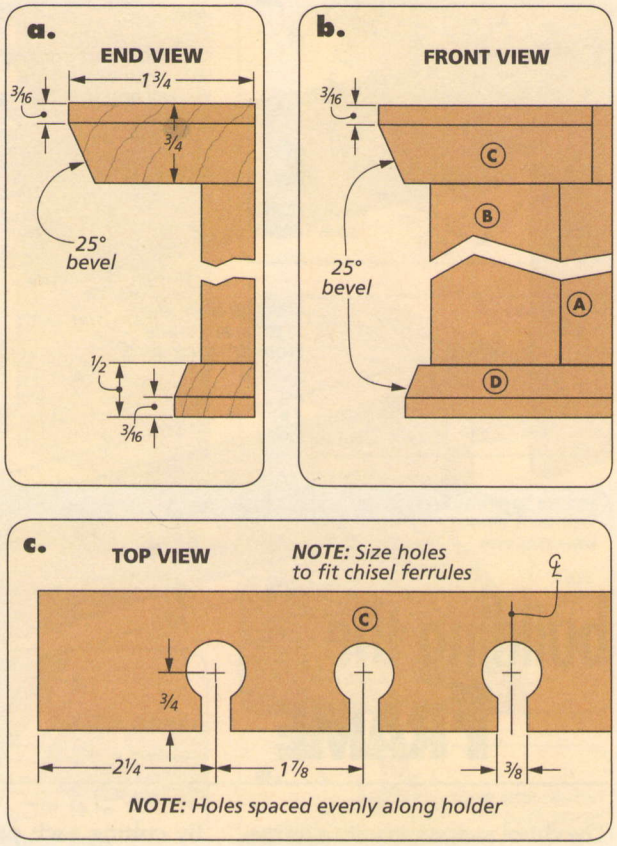

completing the CHISEL RACK

With the basic frame assembled, you're ready to move on to adding the chisel holder and the base trim. Obviously, the chisel holder is the "business end" of the project. But in addition to its functionality, I've dressed it up a little bit by adding a bevel to the front edge and ends. As you can see in the main drawing above, a matching bevel on the base trim unifies the design.

I drilled a couple of holes in the rack to mount it to the wall. Finally, a pair of corbels and a plywood back complete the chisel rack.

CHISEL HOLDER. The chisel holder is made from 3/4"-thick stock. After cutting the blank to final size, lay out the hole and slot locations and head over to the drill press (detail 'c'). You'll need to measure the ferrules on your chisels and drill the holes slightly larger (1/32" - 1/16") in order to get a good fit.

The box below shows how to make the holes. A fence on the drill press keeps the holes aligned. Then, use the table saw to nibble away the waste to form the slots.

Now tilt the table saw blade to 25° and use the miter gauge to bevel the ends of the chisel holder. Finally, complete the piece by cutting the bevel on the front edge.

BASE TRIM. The base trim is also beveled. It's a good idea to make the bevel cuts on a wide blank

How-To: Make the Chisel Holder & Base Trim

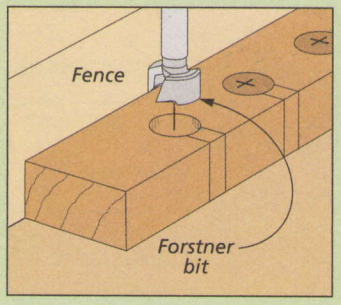

Drill. *Lay out the hole and slot locations on the blank and use the drill press to drill the holes.*

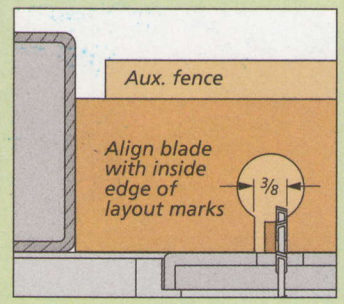

Cut the Slots. *After drilling the holes, use the table saw to cut a slot at each location.*

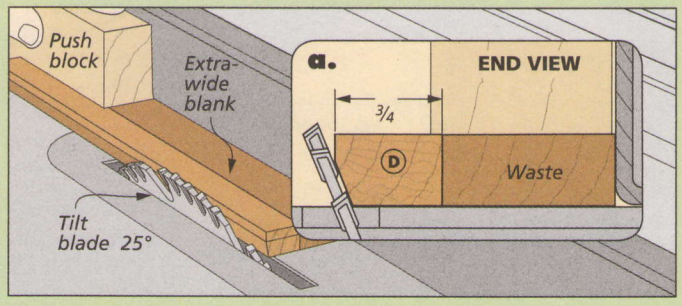

Bevel the Chisel Holder & Base Trim. *For safety, start with a wide blank. Then, tilt the blade to 25° and rip a bevel on the front edges of the chisel holder and the base trim.*

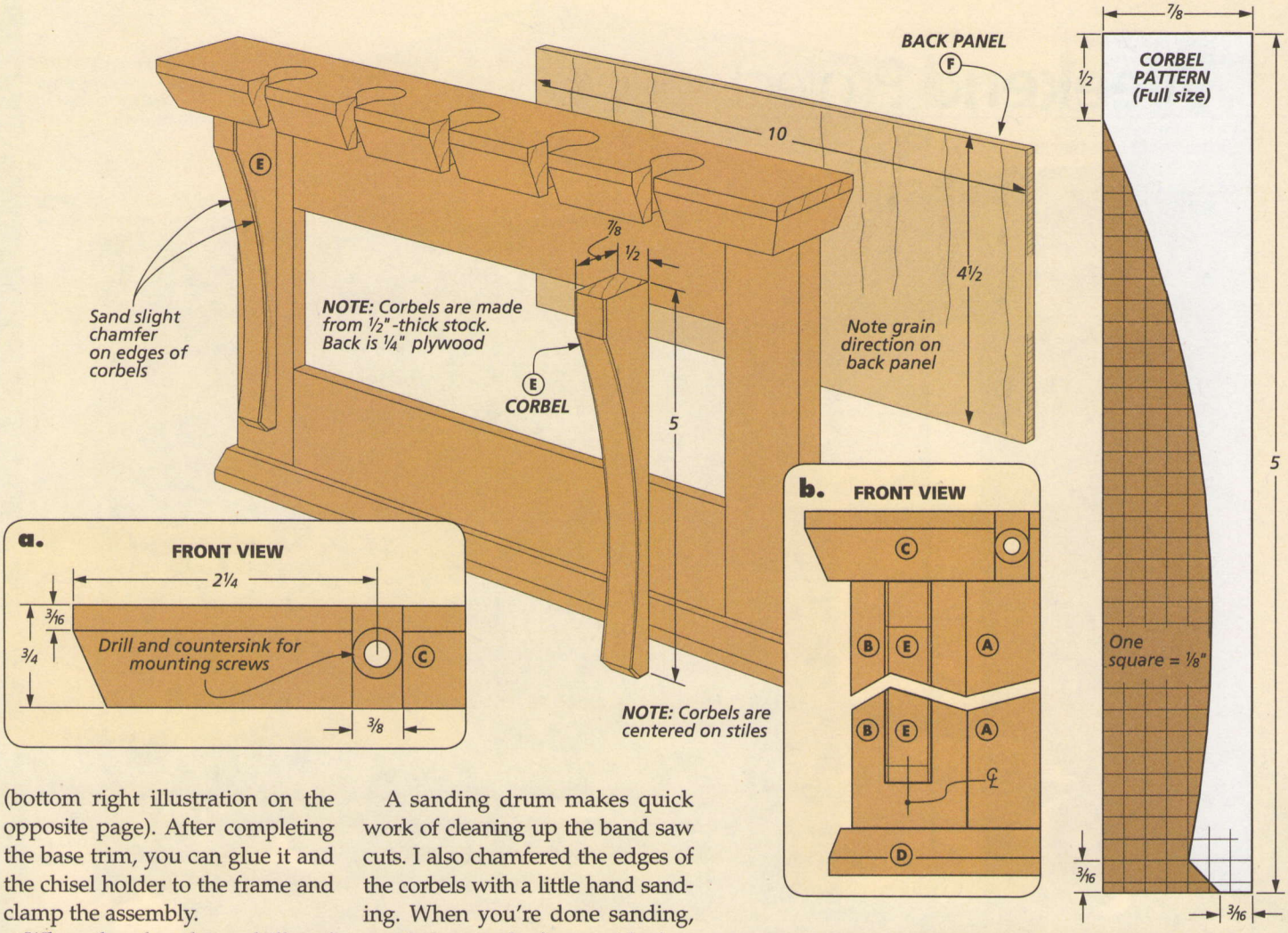

(bottom right illustration on the opposite page). After completing the base trim, you can glue it and the chisel holder to the frame and clamp the assembly.

When the glue dries, drill and countersink a pair of holes through the first and last holes in the chisel holder (detail 'a,' above). These holes provide an easy way to mount the rack to a wall.

CORBELS. At this point, you can get busy on the corbels. Use the full-sized pattern in the right margin to lay out the shape. The box below walks you through the process of cutting them to final shape.

A sanding drum makes quick work of cleaning up the band saw cuts. I also chamfered the edges of the corbels with a little hand sanding. When you're done sanding, attach them to the frame with glue.

ADD THE BACK. Now you can add the plywood back. Simply cut the ¼" plywood to final size and install it in the recess in the back side of the frame with a little glue.

FINISH. As I do for most shop accessories, I gave the rack an oil finish. It's easy to apply and it looks great. All that remains now is to hang it on a wall near your bench and give your chisels a good home.

Materials, Supplies & Cutting Diagram

A	Rails (2)	½ x 1½ - 10
B	Stiles (2)	½ x 1¼ - 5½
C	Chisel Holder (1)	¾ x 1¾ - 12
D	Base Trim (1)	½ x ¾ - 11½
E	Corbels (2)	½ x ⅞ - 5
F	Back Panel (1)	¼ ply. - 10 x 4½

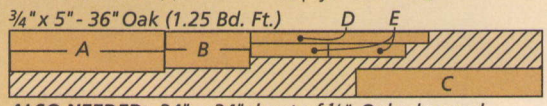

ALSO NEEDED: 24" x 24" sheet of ¼" Oak plywood

Cut & Shape the Corbels

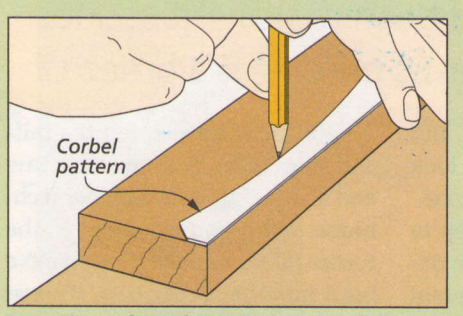

Lay Out the Shape. *Use the full-sized pattern in the margin above to trace the shape of the corbel on the blank.*

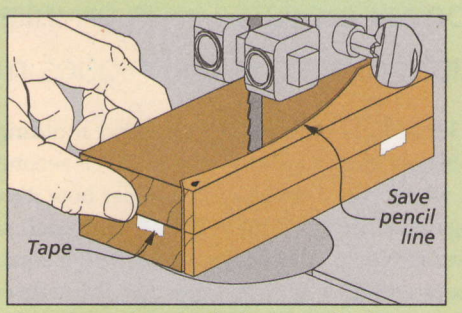

Cut Out the Corbels. *Attach the two blanks with double-sided tape and cut out the shape at the band saw.*

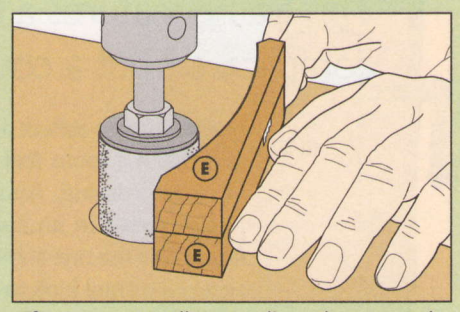

Cleanup. *Install a sanding drum on the drill press to remove the saw marks. Work through the grits for a smooth surface.*

walnut Mirror Frame

This frame features a beveled profile with an inlaid bead molding. It sounds complicated, but a couple of simple techniques makes building it a breeze.

Large mirrors reflect a lot of light and make a room feel bigger and more welcoming. And when you put a mirror in an elegant, wide frame like the one shown above, it brings a formal look to any setting.

At first glance, the frame has a simple, traditional look — a wide, beveled face, bead molding, and mitered joints. But a second look makes you wonder how it's done.

The key is to take each step in order. This gives you a square reference edge for the subsequent operations. A few easy techniques give you great-looking results.

You'll start by shaping the rails and stiles using both the table saw and a straightforward planer technique. Then you can head to the router table to make an attractive bead molding. After that, it's just a matter of cutting the miter joints and assembling the frame.

shaping the RAILS & STILES

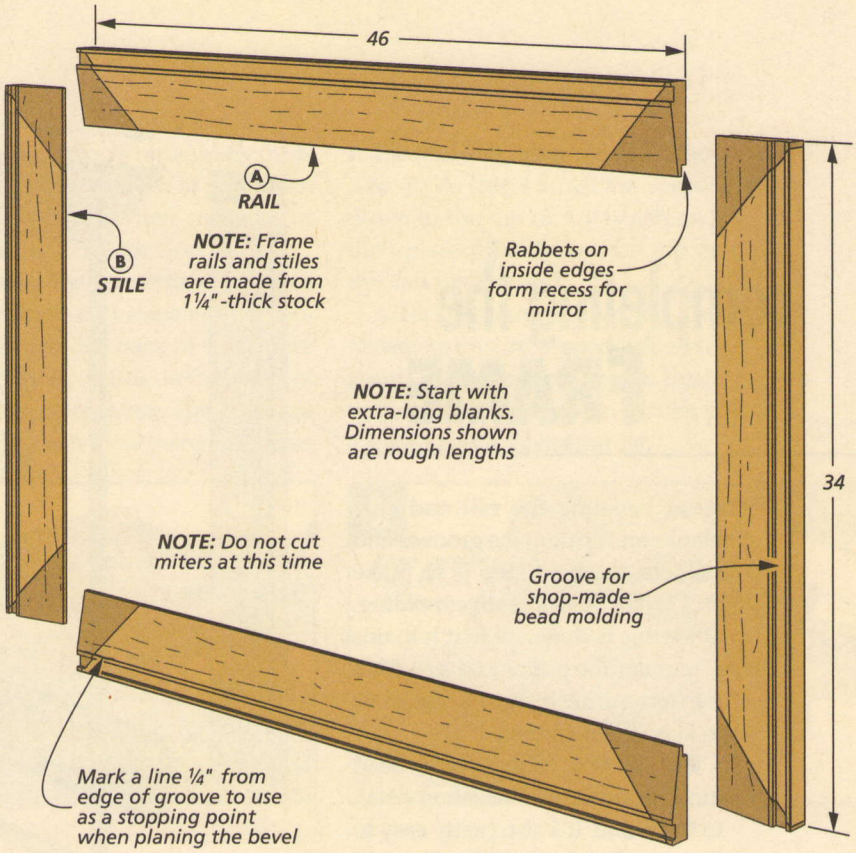

A large frame with wide rails and stiles would look a little too delicate made from ¾"-thick stock. I opted for thicker stock for a balanced, proportional look. This allows you plenty of room to taper the faces without the edges getting too thin.

PREPARING THE STOCK. I started out with 8/4 walnut, and jointed one face before planing it down to 1¼" thick. It's a good idea to leave the pieces extra long at this point. This way, you can cut off any snipe on the ends. Once you've reached the final thickness, you can cut the pieces to rough length.

GROOVES. The box below shows the process for shaping the rails and stiles. The place to start is with the grooves for the molding.

A dado blade in the table saw makes quick work of cutting the grooves for the molding. The important thing to keep in mind here is that you need to hold the stock tight against the fence and the surface of the table. Even a small deviation will show up later as a gap when you install the molding.

BEVEL THE FACES. The width of the bevel prevents you from cutting this detail at the table saw. Instead, I used a planer to bevel the faces.

Start by ripping four 10° cleats from the edge of some "two-by" stock. After cutting the cleats to the length of the rails and stiles, attach them to the inside edge of the rails and stiles with double-sided tape.

The beveled cleats support the workpieces at the correct angle so you can safely run them through the planer to form the beveled face. A pencil mark on each face serves as a stop mark for planing the bevels. Detail 'a,' above shows the finished dimensions.

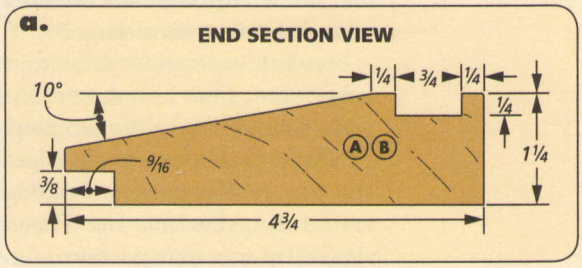

Finally, head back to the table saw and cut the rabbets on the inside faces to form the recess for the mirror (right drawing, below).

How-To: Make the Grooves, Bevels & Rabbets

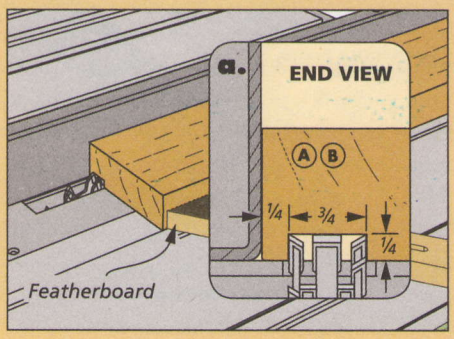

Grooves. *Install a dado blade to cut the shallow groove for the molding. Use a featherboard to help keep the cut straight.*

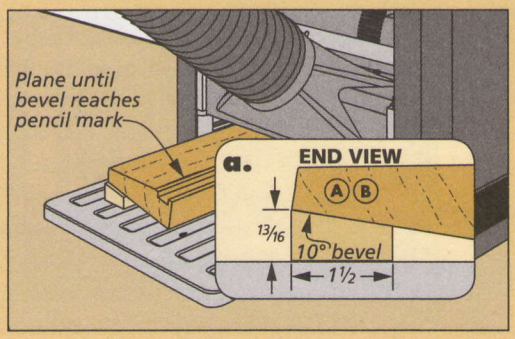

Plane the Bevel. *Use a strip of double-sided tape to fasten a cleat to the back side of the workpiece. Then plane the face to form the bevel.*

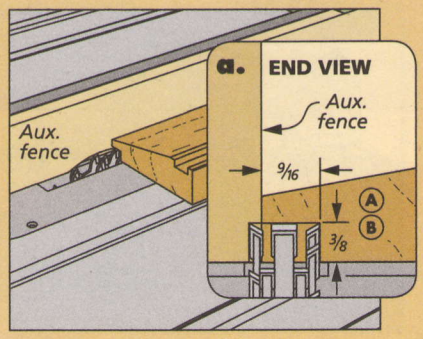

Rabbets. *Attach an auxiliary fence to the rip fence to cut the rabbets on the inside face of the frame pieces.*

completing the FRAME

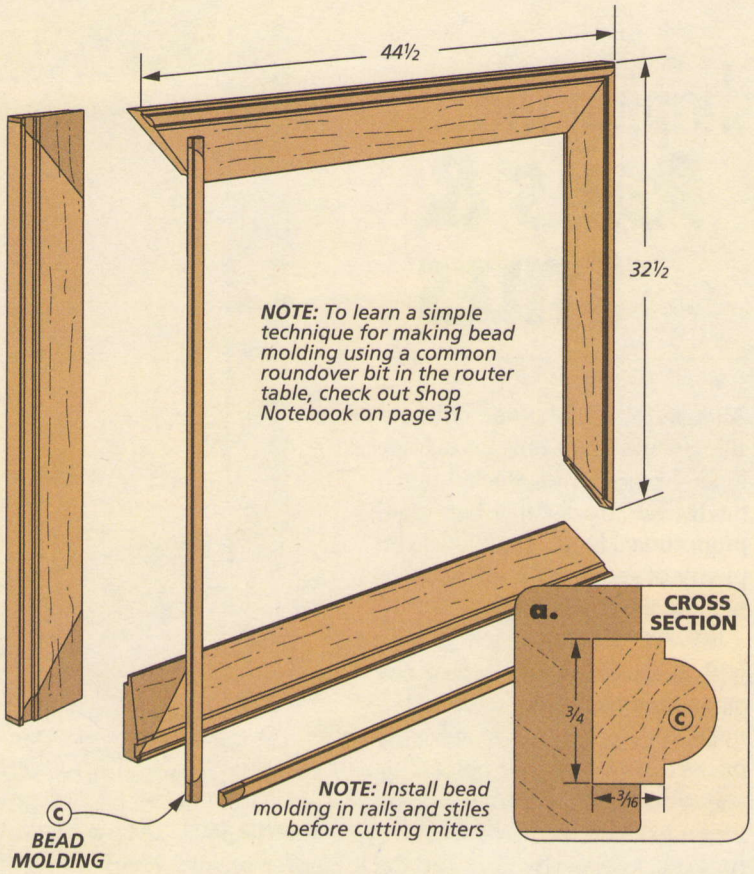

After beveling the rail and stile blanks and cutting the grooves and rabbets, the next step is to make and install the decorative molding. Once this is done, all that remains is to miter the pieces and assemble the frame using biscuits in the joints to keep them aligned.

BEAD MOLDING. Shop-made bead molding adds an interesting detail to the frame. It's also pretty easy to make at the router table. (You can find out where to get the bullnose bit I used in Sources on page 51.)

The left and center drawings, below show how I used an extra-wide blank to make the molding. This way, you can rout both edges and then rip the strips of molding to final size at the table saw. (For an alternative way to make the molding using a roundover bit, refer to Shop Notebook on page 31.)

INSTALLING THE MOLDING. Getting a good fit for the molding starts when you're planing the blank. You'll want a snug fit in the grooves in the rails and stiles. It's best to keep the fit tight to start with, because you can always plane the individual strips for a perfect fit when you install them (right drawing, below). When you're happy with the fit, brush on a thin coat of glue on the sides and bottom of the molding strips.

It's a good idea to use a long caul to clamp the molding in place. You might be tempted to skip the clamps if the fit is tight, but the clamps and cauls make sure it's fully seated in the groove.

CUT THE MITERS. I waited to cut the miters until after installing the molding. I think it's easier to get a seamless joint this way, rather than trying to fit the molding after assembling the frame.

Getting gap-free results when fitting large miters can be a challenge.

How-To: Make & Fit the Bead Molding

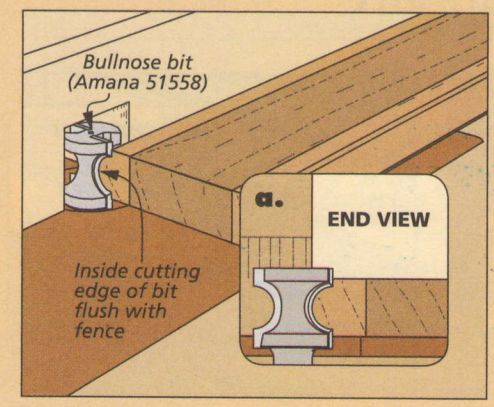

Rout the Blank. *Use a test piece to set the bit height so the profile is centered on the thickness, then rout the profile on both edges.*

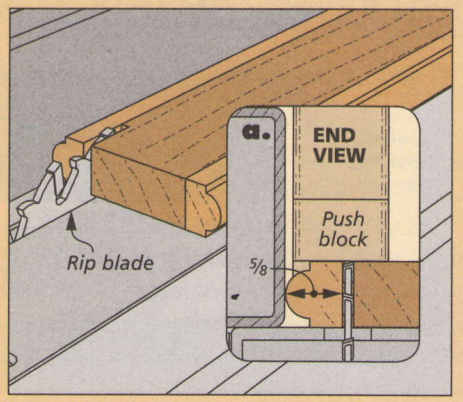

Rip the Strips. *With a good-quality rip blade in the table saw, use a push block to rip the strips of molding from the wide blank.*

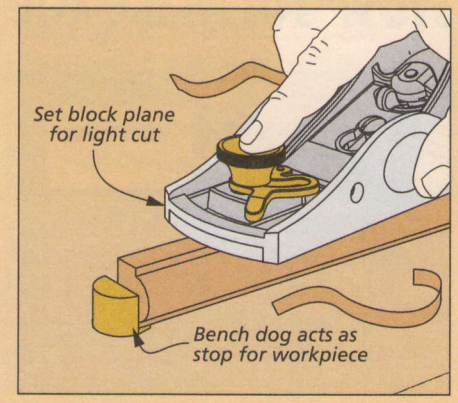

Plane to Fit. *In order to get a seamless, gap-free fit, you might need to trim the edges of the molding with a hand plane.*

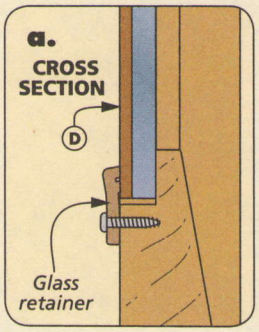

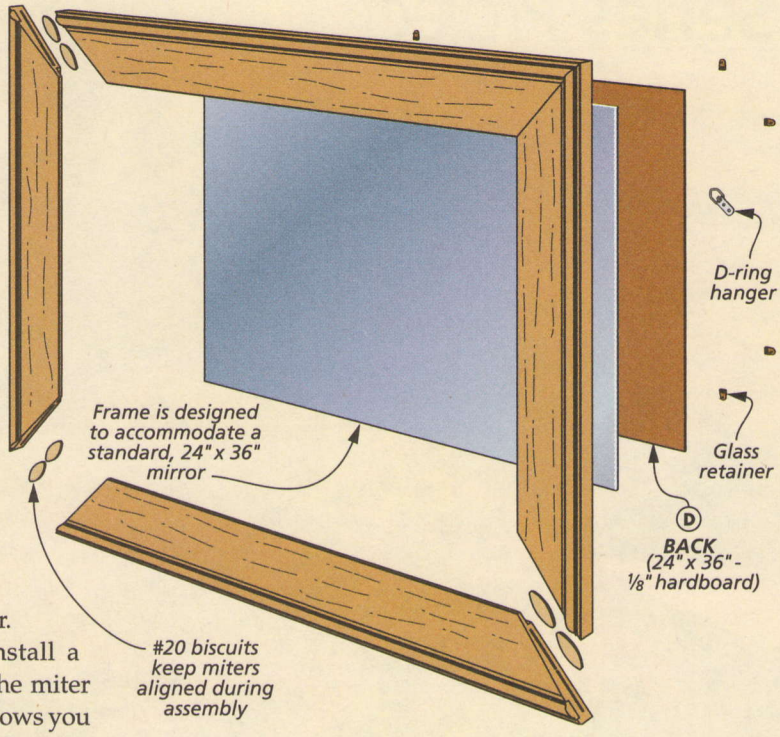

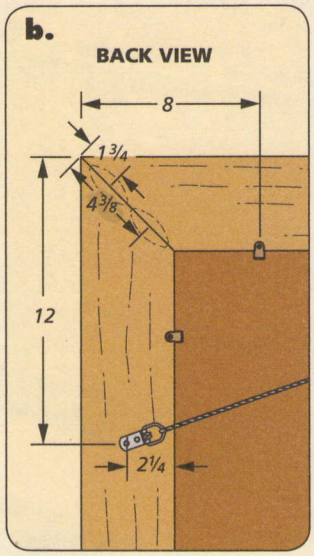

Start by installing a high-quality crosscut blade in the saw. You'll often find these labeled as finishing blades because of their high tooth count. They leave a very smooth surface for a tight-fitting miter.

The next step is to install a long auxiliary fence on the miter gauge. The extra length allows you to attach stop blocks for keeping the pieces the right length. A little adhesive-backed sandpaper on the face of the fence will help you keep the large workpieces from shifting during the cut. Finally, double check the settings for the miters as you adjust the miter gauge.

DRY FITTING & MARKING. After cutting the miters, it's worth taking a few minutes to dry-fit the frame. On top of checking the fit of the joints, clamping up the assembly allows you to mark the biscuit locations on the back side of the frame.

BISCUIT JOINTS. Biscuits provide some additional glue surface and help keep the pieces aligned during assembly. I used two at each joint.

ASSEMBLY. The right drawing, below shows how to use both a band clamp and hand clamps to glue up the frame. While the biscuits help, I still like to clamp the joints to make sure they stay flat.

FINISH & FIT THE MIRROR. After applying the finish, fit the mirror and back in the frame. I used glass retainers with screws to hold the back and mirror in place. Now add the hangers and wire to mount the mirror on the wall in your favorite room. W

Materials, Supplies & Cutting Diagram

A	Rails (2)	1 1/4 x 4 3/4 - 44 1/2
B	Stiles (2)	1 1/4 x 4 3/4 - 32 1/2
C	Bead Molding (1)	5/8 x 3/4 - 160 rgh.
D	Back (1)	1/8 hdbd. - 24 x 36

- (2) D-Ring Hangers w/Screws
- (8) Glass Retainers w/Screws
- (1) 24" x 36" Mirror
- (8) #20 Biscuits

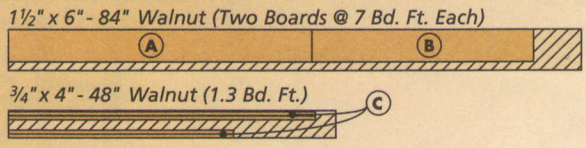

ALSO NEEDED: 24" x 48" Sheet of 1/8" Hardboard

Cut the Miters & Assemble the Frame

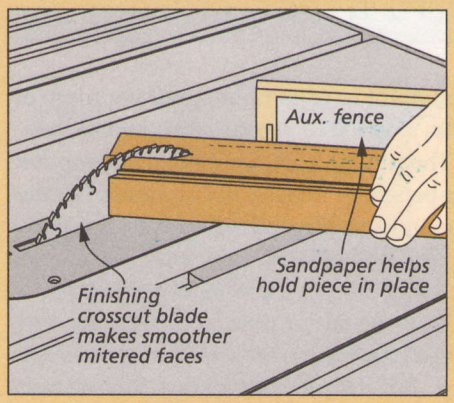

Cut the Miters. *Use a miter gauge and auxiliary fence to cut the miters. Careful setup and layout marks are the key.*

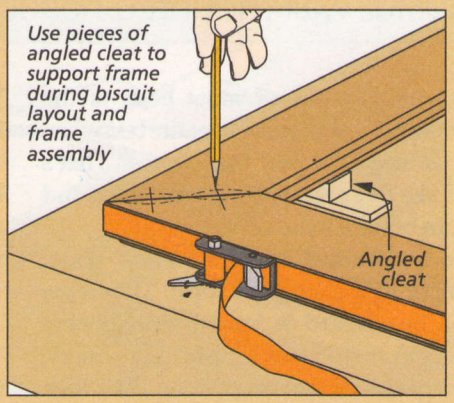

Layout for Biscuits. *Taking the time to dry-fit the assembly also allows you to make the layout marks for the biscuits.*

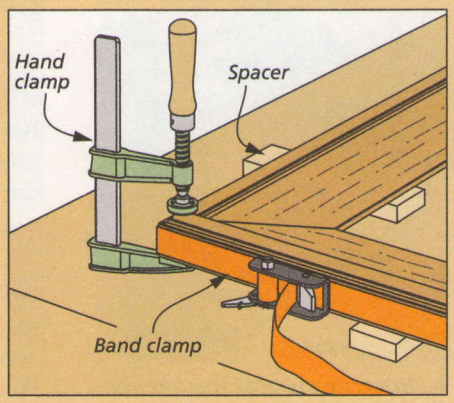

Clamping the Frame. *Use a band clamp to assemble the frame. A small hand clamp helps keep the faces aligned.*

frame & panel Headboard

This easy-to-build project is guaranteed to dress up any bedroom. Just pick your favorite style and you'll have a beautiful, wall-mounted headboard in short order.

▲ You can choose from three panel options — wood, fabric, or rattan.

All you really see of most beds is the headboard. So why build an entire bed when you just need the part that shows? That's why I like this project. It's simple, easy, and you can build it in no time.

The headboard is a frame and panel assembly in the simplest form. The frame of the headboard is joined with pocket screws, so there's no complicated joinery. A few pieces of molding (along with turn buttons on the back) hold the panel in place. And when you're finished, the headboard hangs on the wall above the mattress. You don't have to build anything more or even attach it to your existing bed.

This straightforward design has another big benefit — it's easy to customize. Besides the solid hardwood version in the main photo, two other design ideas are shown in the photos on the left and on page 28.

Just one more note about the design: These headboards are sized for a queen-size bed. But if you have a king, full, or twin bed, you just need to adjust the length to fit. Other than that, all three of the headboards are built the same way.

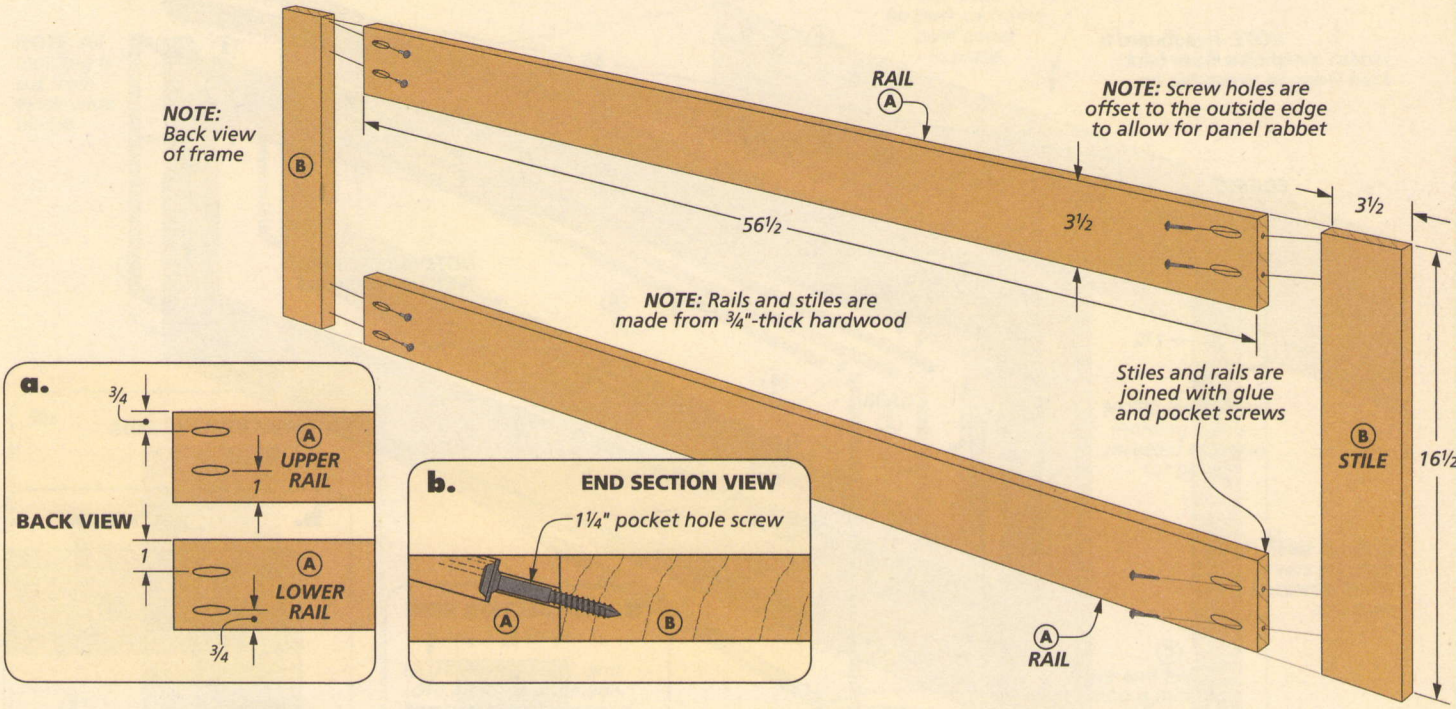

make the FRAME

The frame for the headboard in the main photo is assembled with pocket screws and then wrapped with trim to hide the end grain. Built up molding is added around the opening later to secure the panel in the front.

STILES & RAILS. One advantage to pocket hole joinery is that the stiles and rails that form the headboard frame are simply cut to final size. Make sure that both ends of the workpieces are square so the frame will be square when it's assembled.

POCKET SCREW ASSEMBLY. To assemble the frame, I drilled pocket holes in the rails (detail 'a'). The holes are offset to the outside edge to allow room for a rabbet that will hold the panel on the optional designs.

Using a pocket hole jig, drill the pocket holes in the ends of the rails. Then just add the pocket screws at each corner to assemble the frame (detail 'b'). You'll need to clamp the two workpieces flush with a locking clamp to hold them tight while you drive the screws. You can see how it's done in the How-To box below.

Once the frame is assembled, there are only a few steps left to complete the headboard. Just turn the page for information on the trim and panel insert for the headboard.

How-To: Fast, Sturdy Joinery

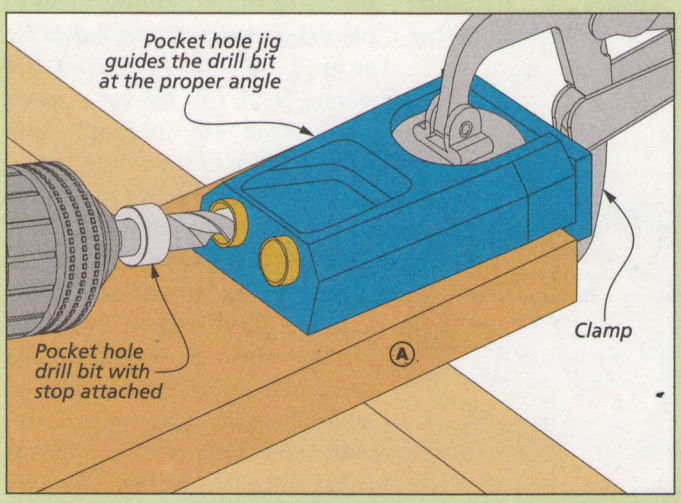

Drill Holes. *A pocket hole jig guides the stepped drill bit at the correct angle when drilling the holes for the pocket screws. A stop on the bit sets the depth of the hole.*

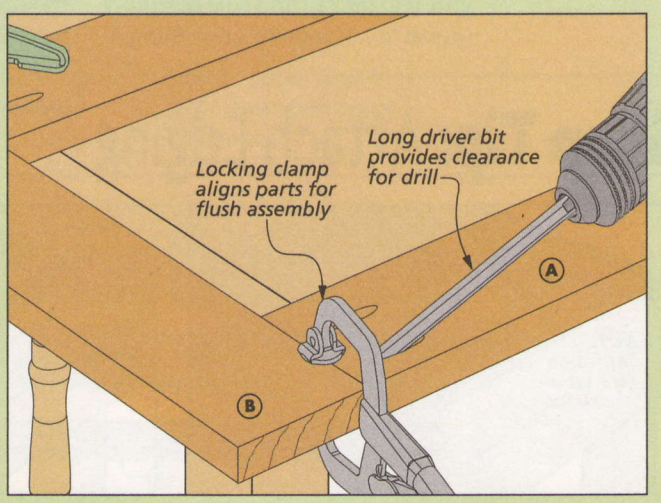

Assembly. *To assemble the frame, use a clamp that will hold the two workpieces flush. An extra long driver bit will reach into the pre-drilled hole to tighten the screw.*

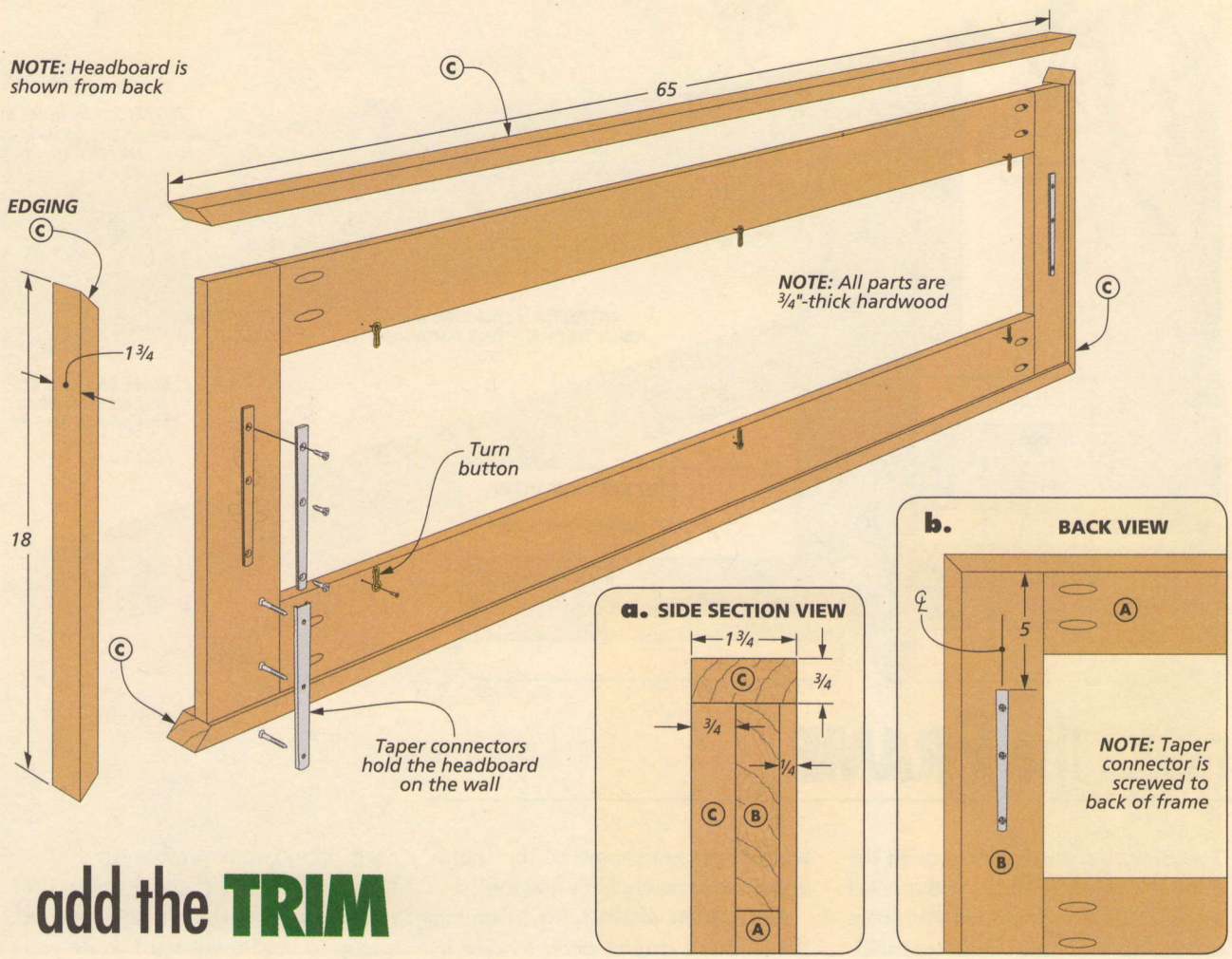

add the TRIM

Several layers of molding and edging dress up the outside and inside edges of the basic frame. Later, you'll add the panel to complete the headboard.

EDGING. I started with the outside edging. The frame is wrapped with mitered edging to hide the end grain of the frame. After you miter the edging to length, you can glue it to the rail and stile assembly (detail 'a'). But there's one thing to mention here. The molding overhangs both sides of the frame, but by different amounts. To create a consistent, 1/4" overhang at the back of the frame, you'll need to use spacers when attaching the edging, as shown in the Shop Tip below. Then use a band clamp to hold it in place as the glue dries.

COVE MOLDING. Shop-made cove molding creates a transition between the frame and the edging as well as from the frame to the panel (detail 'a', opposite page). So the next step is to make all this cove molding. I routed the profile on an extra-wide blank with a 3/8" cove bit, as shown in detail 'b' on the opposite page. Then the molding is ripped to size.

Once all the cove molding is made, you can start mitering the pieces to fit and gluing them in place. I started by fitting the pieces around the outer edge of the frame. Next, I fit the cove molding around the opening, flush with the face of the frame (detail 'a,' on opposite page). This creates a lip to hold the panel in place.

BEAD MOLDING. The last bit of molding to add is a strip of bead molding. The narrow bead hides the jointline between the frame and the cove molding. Again, the bead molding is routed on a wide, extra-long blank (detail 'c,' on opposite page) and then cut free. Once it's completed, you can miter it to fit as shown in detail 'a' on the opposite page and then glue it in place.

Shop Tip: Attach Edging

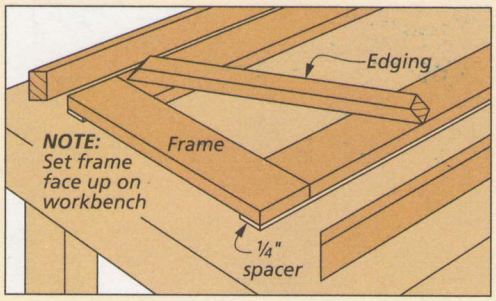

Spacers. *When attaching the edging to the frame, spacers can be used to create the 1/4" overhang at the back face.*

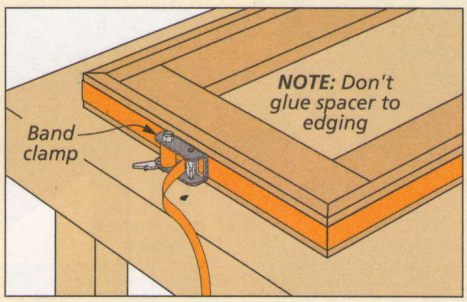

Clamp. *A band clamp holds the edging in place while the glue dries. Leave the spacers in place so the frame doesn't slip.*

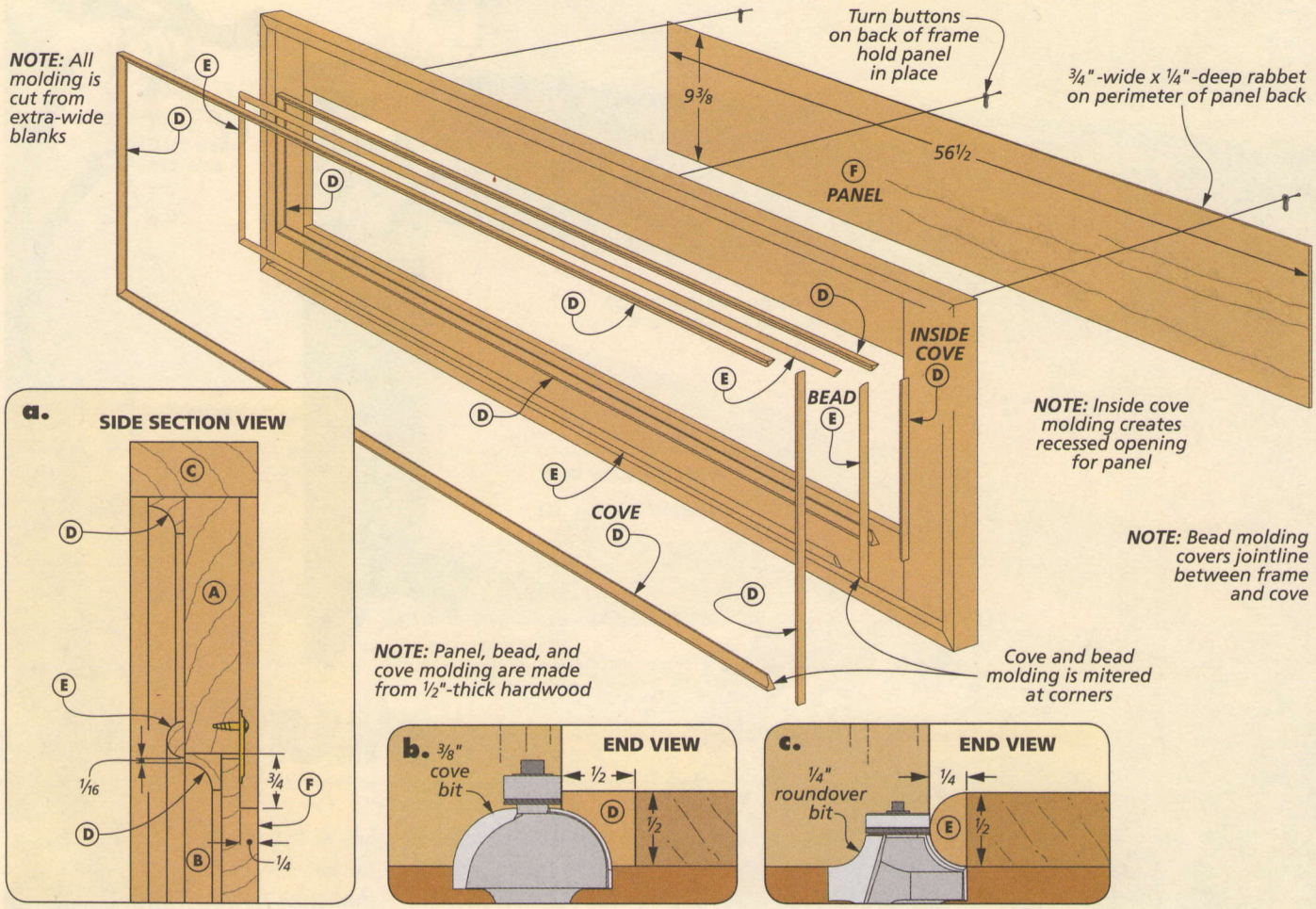

PANEL. The panel is the last part of the headboard you'll need to make. It's glued up from two pieces of ½"-thick hardwood and cut to size, as shown in the drawing above. Since the panel is made of solid wood, I sized it a little narrower than the opening in the frame. This will give the panel some room to expand with seasonal changes in humidity.

RABBET. The panel is held in the frame with brass turn buttons. You'll need to cut a rabbet around the edge of the panel to provide a recess so the turn buttons can lay flat (detail 'a'). I did this at the table saw, using a dado blade buried in an auxiliary rip fence.

FINISH. I found it more convenient to apply the stain and finish before installing the panel in the frame. Once the finish is dry, you can fit the panel in the frame and secure it with the turn buttons.

CONNECTORS. The last step is to add a pair of taper connectors to mount the headboard to the wall. As you can see in the drawing on the opposite page, one part of the connector is screwed to the back of the headboard and the other part is screwed to the wall. W

Materials, Supplies & Cutting Diagram

A	Rails (2)	3/4 x 3 1/2 - 16 1/2	D	Cove	1/2 x 1/2 - 320 (rgh.)	•	(8) 1 1/4" Pocket Screws
B	Stiles (2)	3/4 x 3 1/2 - 56 1/2	E	Bead	1/4 x 1/2 - 140 (rgh.)	•	(2) 6" Taper Connectors
C	Edging	3/4 x 1 3/4 - 170 (rgh.)	F	Panel (1)	1/2 x 9 3/8 - 56 1/2	•	(6) Turn Buttons

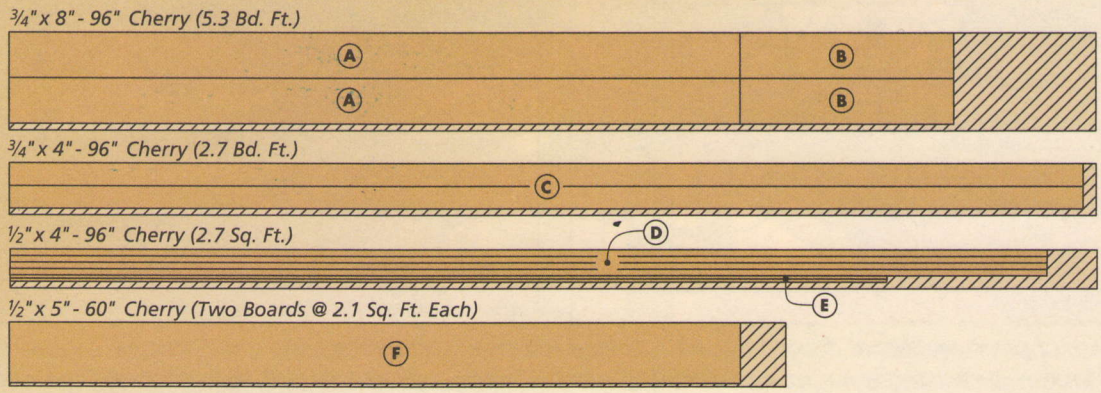

DESIGNER'S NOTEBOOK

The two options for the headboard include a rattan-covered panel and a fabric-wrapped panel. Both panel styles are simply plywood covered with your choice of material.

If you plan to build either of the alternative headboards, there are a couple of changes to the frame that you'll need to know about. First the frame opening has a rabbet routed on the

How-To: Make a Rattan Panel

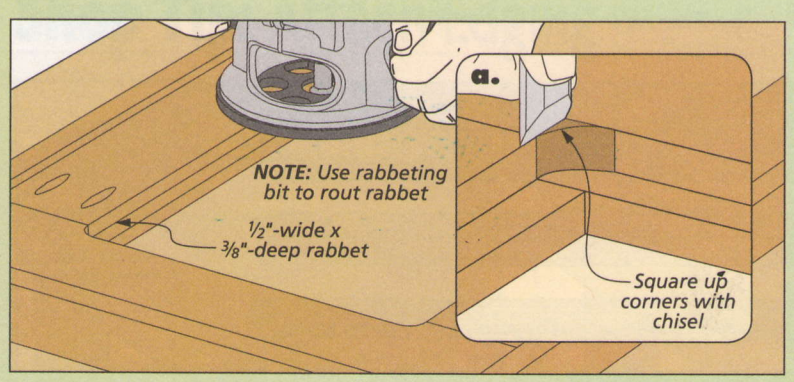

Panel. *The panel for both optional headboard designs sits in a rabbeted opening in the frame. To rout the rabbet, use a handheld router. Then square up the corners with a sharp chisel (inset).*

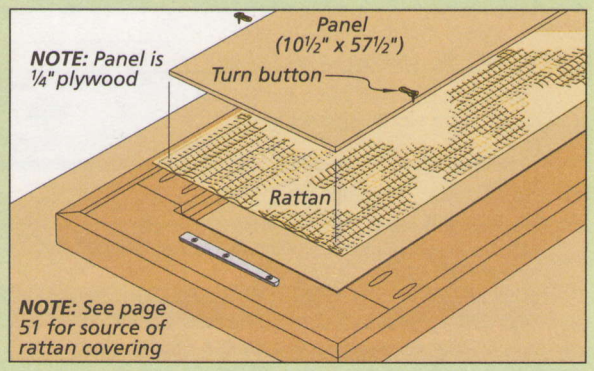

Cover. *To cover the panel in rattan, apply several coats of spray adhesive to both the panel and the rattan. Then center the panel and trim off the excess.*

back side. As a result of the rabbet, the frame opening doesn't need the molding to hold the panel in place like it does on the solid wood version.

Frame. To build the frame, first cut the frame and edging workpieces to size and assemble them as shown on pages 25 and 26. Once the frame is assembled you'll rout the rabbet, as shown in the left drawing on the opposite page. Then add your choice of finish to the frame. You can read more about the finish I used in Sources on page 51.

Panel. When the frame is complete, make a panel to fit. I cut the plywood to size and then added a covering. The panel options are shown in the box below and on the opposite page.

Padded Fabric Panel

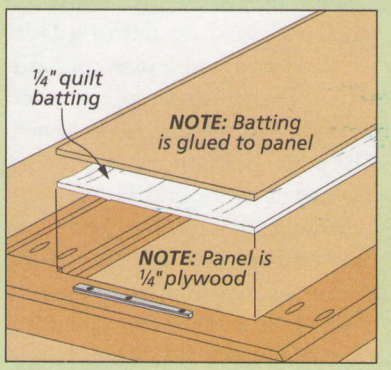

Batting. *Cut a piece of batting to fit the panel. It adds depth without adding bulk at the edges.*

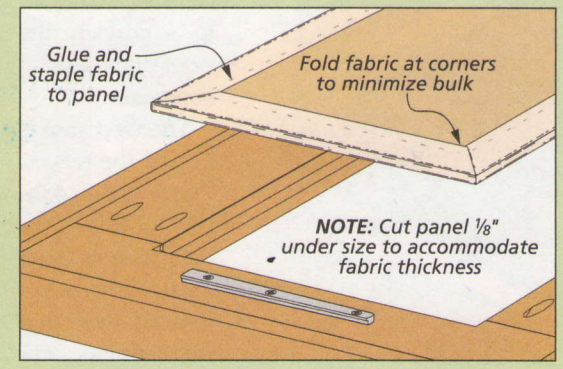

Fabric. *Cut the fabric several inches larger than the panel and fold it at the corners. Then use a hot-glue gun and staples to hold it securely in place.*

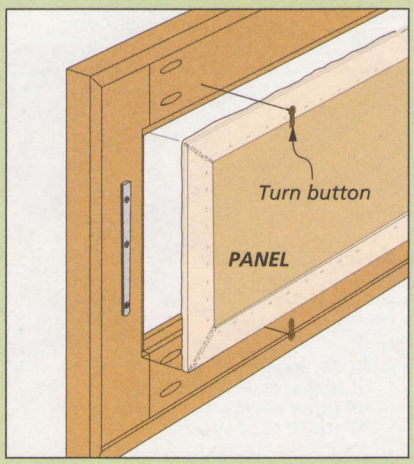

Insert the Panel. *The panel fits into the rabbeted frame and is held in place with turn buttons.*

SHOP NOTEBOOK

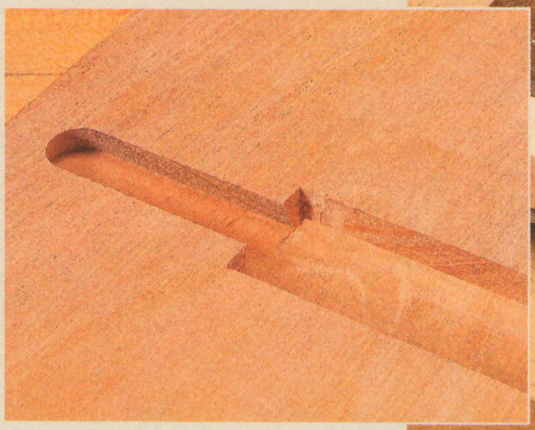

A jig allows you to rout accurate dadoes and dovetail slots for the web frames of the chest.

Dado & Dovetail Slot Jig

In order to accurately rout the dadoes, rabbets, and dovetail slots in the sides of the Chippendale chest on page 32, I used a jig. As you can see in the photo above, a pair of fences on the jig guides the router in a perfectly straight path. And a removable stop at the end of the jig controls the length of the stopped dadoes and rabbets, as well as the dovetail slots.

CONSTRUCTING THE JIG. To build the jig, start by cutting a piece of hardboard to the overall size of the base. Then add a pair of cleats to the bottom of the base. These cleats not only straddle the sides, but they also square the jig to the edge of the workpiece. One of the cleats is glued flush to the end of the base, and the other is positioned to sandwich the sides of the case in between.

The next step is to add the fences. There are a couple of things to be aware of here. First, you want to make sure that the fences are perfectly square to the cleats. And second, the fences should be spaced to fit around your router base. What you're shooting for is a snug fit that will still allow your router to slide smoothly between the fences.

With the cleats and fences glued in place, the next step is rout a slot through the base of the jig. This will create a reference edge to line up the jig with the layout lines on your workpieces. To rout this slot, install a ¾"-dia. straight bit in your router. Then set the bit depth to just over ¼" and make a pass along the entire length of the jig, routing completely through the base.

STOP. The last part to add is the stop. It's glued up out of a layer of hardboard and a piece of hardwood. The stop is simply screwed in place so it can be repositioned. The initial position will depend on the size of your router base.

When you're routing the dadoes and rabbets, the goal is for the router to contact the stop when the edge of the bit is 2" from the front edge of the case side. Then to rout the dovetail slots, you'll need to move the stop 1⅞" farther down toward the end of the jig.

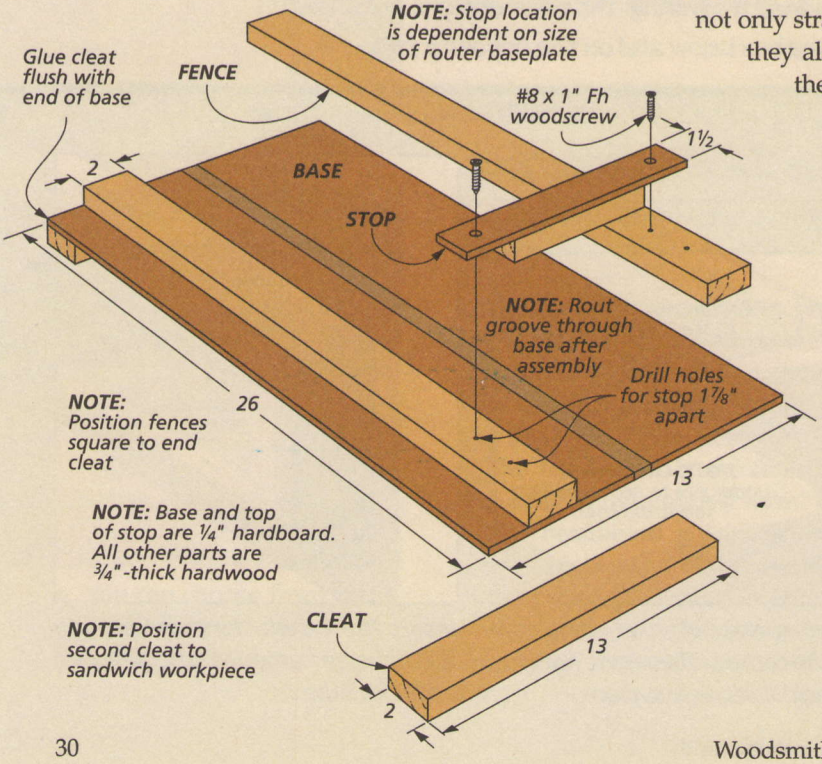

Veneered Drawer Fronts

One of things about the chest of drawers (page 32) that really stands out is the ribbon-figure mahogany veneer used on the drawer fronts. In order to get a continuous grain pattern, I cut the veneer for all four drawer fronts out of a single, large sheet of paper-backed veneer.

I started by selecting one area on the sheet to lay out all the drawer fronts. The goal here is to pick an area where the ribbon figure has a fairly symmetrical appearance.

After drawing a centerline on the chosen area, I then laid out the four drawer pieces in order, as shown in Figure 1. You'll want to lay these pieces out slightly oversize, to make it easier to glue them to the drawers. Then you can cut the pieces to rough size.

To keep the veneer lined up on all of the drawers, I transferred a centerline onto the back of each piece of veneer, as well as on the inside of all the drawer fronts. Then you can glue the individual pieces of veneer to the drawers using contact adhesive. To do this, I taped the veneer down to the top of my bench and then placed the drawer on top of the veneer (Figure 2).

After pressing down on the veneer to ensure a good adhesive bond, I trimmed the veneer flush with the front of the drawer using a router and a flush-trim bit.

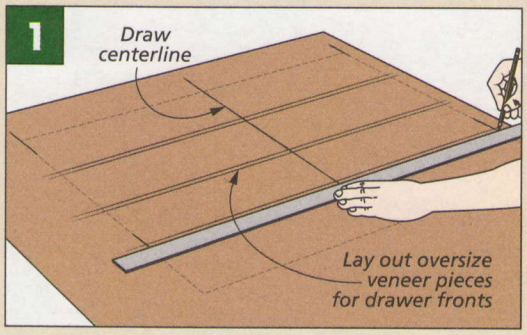

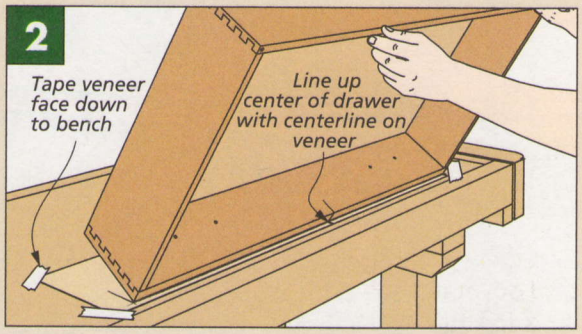

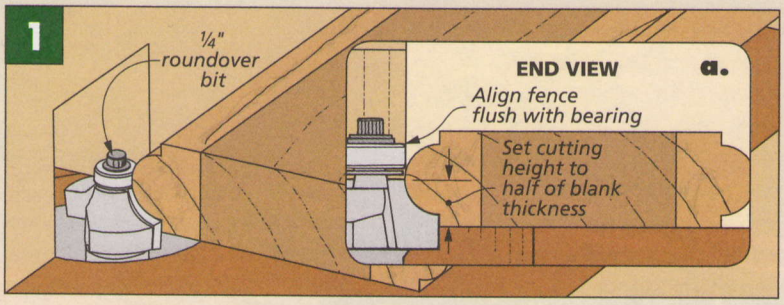

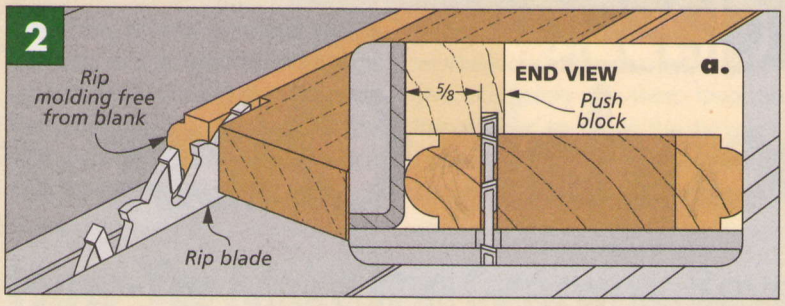

Bead Molding

To make the bead molding for the mirror frame on page 20, I used a bullnose profile router bit. If you don't own one of these bits, you can make the molding with an ordinary roundover bit.

All you have to do is position your router table fence so that it's flush with the bearing of the bit. Then set the cutting height of the bit to half the thickness of your workpiece, as shown in Figure 1.

To create the bead, simply rout a roundover on one edge of the blank, then flip it over to complete the profile. Finally, rip the bead molding free from the blank at the table saw, as you see in Figure 2.

Cock Bead Gauge

When it comes to adding the cock bead around the drawer openings of the chest of drawers, there's one main challenge. You want the bead to stand proud of the front edges of the web frames and the sides of the case by the correct amount. If it sticks out either too far or not far enough, it just doesn't look right.

In order to ensure that each piece of molding projects by the proper amount, I made a simple gauge block. It's nothing more than a small block of wood with a shallow rabbet cut in one edge, as you can see in the drawing at right.

By holding the gauge block against the front of the case, the rabbet acts as a stop for the cock bead as you clamp it in place. This way, you're guaranteed that all the bead molding joints will end up flush and with just the right amount of projection. Spring clamps can be used to hold the molding in place until the glue dries. W

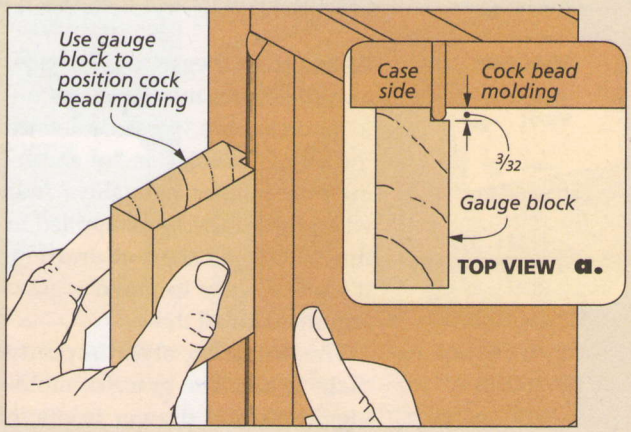

classic Chippendale Chest

Pleasing proportions, perfect details, and a healthy dose of challenging woodworking add up to a great project on every level.

As this project began to take shape, a word came to mind that sent me to the dictionary. Webster's defines the word "classic" as "of enduring style, interest, or quality." And when those criteria are applied to this handsome chest of drawers, it's pretty easy to make a good argument for all three.

The enduring style is pretty plain to see. The graceful moldings, veneered drawer fronts in their beaded openings, and ogee bracket feet are all spot-on period details. Thomas Chippendale would no doubt approve.

However, this is only what you see on the surface. For a woodworker, the interest comes from the skills and techniques needed to build such a masterpiece. And in this respect, the old and new come together. Although most of the tools and techniques you'll need to use are thoroughly modern, much of the construction and joinery is a nod to another time. Tackling this project is guaranteed to teach you a thing or two and take your woodworking to a new level.

And what's the end result of all this fine craftsmanship? Well that's easy. The answer is an heirloom-quality chest that you'll be proud to show off and pass down through the generations.

NOTE: Construction is all solid wood except for drawer bottoms, back panels, and dust panel

NOTE: Cock bead is mitered around drawer openings

Drawers constructed with half-blind dovetails

Period pulls and keyhole escutcheons compliment design

NOTE: Drawers are graduated in height for visual appeal

Drawers fronts veneered with ribbon-figure mahogany

NOTE: Drawers slide on center-mount guides and runners

NOTE: Case uses sturdy, lightweight web frame construction

Case rests on molded built-up base assembly

NOTE: See page 51 for sources of supplies

Traditional thumbnail and bead profile routed on edge of top

Frame and panel back stiffens case construction

Brace reinforces back foot

NOTE: Article on page 42 details making of ogee bracket feet

Front bracket feet are mitered and splined

CONSTRUCTION DETAILS

OVERALL DIMENSIONS: 39"W x 20 11/16"D x 39"H

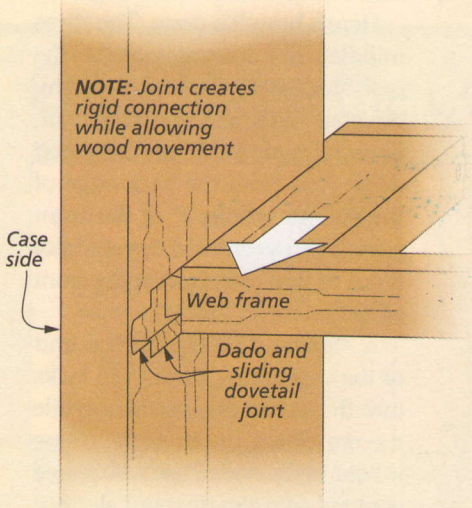

SLIDING DOVETAIL

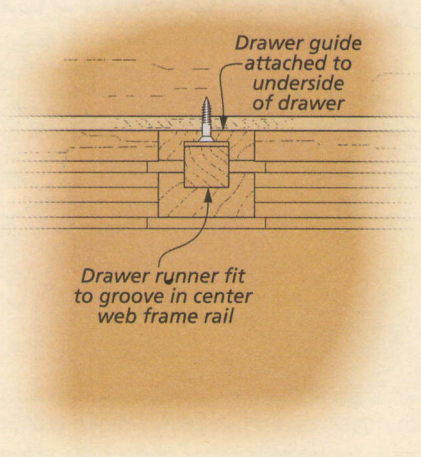

DRAWER GUIDE SYSTEM

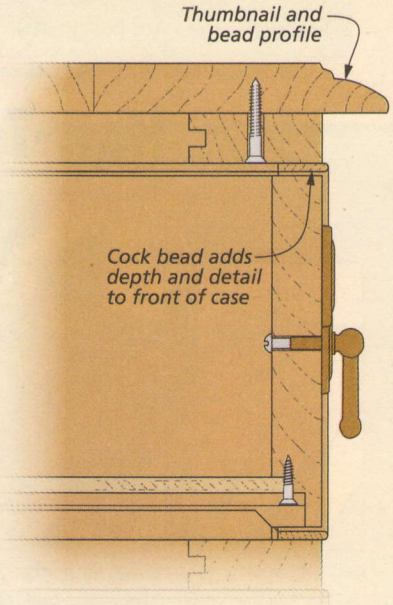

SIDE SECTION VIEW

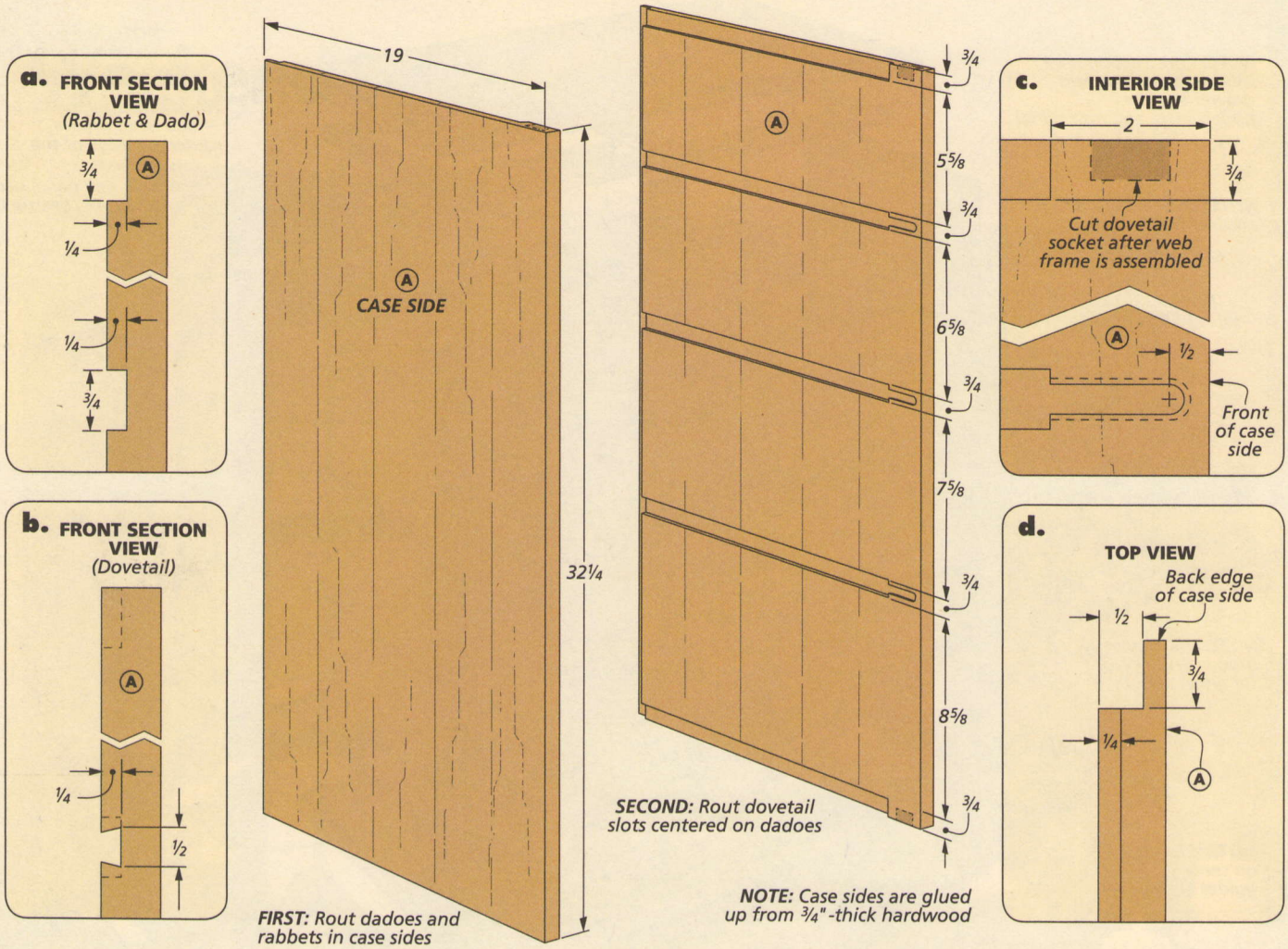

starting the CASE

The project begins by assembling a case using traditional construction methods. The two solid-wood sides are connected by five web frames that form the drawer openings. A frame and panel assembly encloses the back of the case. All the remaining details are added around (and inside) this solid foundation.

SIDE PANELS. The first step is a small one. You'll need to glue up two oversize panels for the sides of the case from 3/4"-thick stock. The sides will be prominent, so take the time to get a good color and figure match. Once the glue is dry and the panels are cleaned up, you can cut them to final size.

JOINERY OVERVIEW. Now you can get started on the case joinery. This is where things get interesting. The goal is to end up with a rigid case while avoiding wood movement problems caused by the "cross-grain" construction between the case sides and web frames.

Here's how it's done. The three middle web frames are joined to the case sides with dado and sliding dovetail joints, as seen in the main drawing and detail 'c.' A stopped dado runs from the back edge of the side to within 2" of the front edge. Then a centered dovetail slot is cut to stop just short of the front edge (details 'b' and 'c').

A sliding dovetail on the end of the web frame's front rail locks into the slot in the case side while the remaining depth of the frame is held in the dado. The web frame is glued into the dovetail slot but allowed to "float" in the dado.

How-To: Lay Out the Dadoes

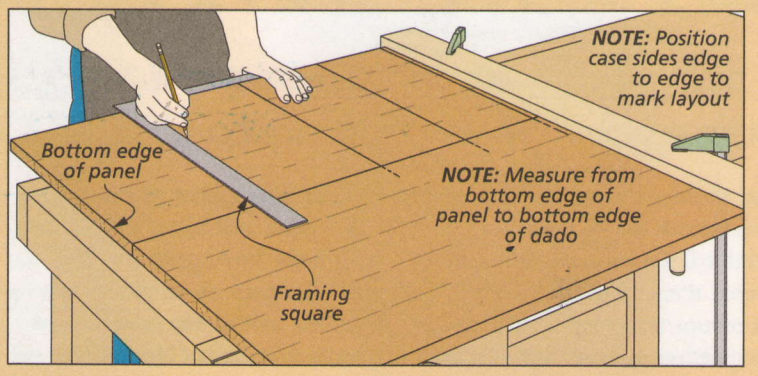

Side to Side. *To ensure the dado layout on both sides matched up, I first marked the location of the bottom edge of each dado on one panel. Then I used these marks to lay out both sides at once.*

The top and bottom frames use slightly different joinery. Here, stopped rabbets take the place of the dadoes, as shown in the main drawing and detail 'a' on the opposite page. And standard dovetail sockets cut into the top and bottom edges of the sides hold dovetails cut on the ends of the front rails. (You won't cut these dovetail sockets until after the web frames have been assembled.)

A DADO JIG. I know this may seem pretty involved, but there are a number of ways to streamline the job starting with the handy dado routing jig I used to cut most of the joinery in the case sides. The jig is shown in the drawings at right and the photo below. You'll find all the construction details in Shop Notebook on page 30.

In a nutshell, the router base is captured between two fences and rides on two hardboard plates. The jig is made so that the inside edges of the baseplates align with the ¾" straight bit I used to cut the dadoes. This feature, along with a removable stop, allows you to use the jig to quickly rout the dadoes, rabbets, and the dovetail slots.

LAYOUT. Once the jig is ready to go, you can lay out the dadoes on the mirror-image sides (main drawing, opposite page). To end up with square drawer openings, the location of the joinery needs to be dead on from side to side. A good starting point is shown in the box on the opposite page. I measured on one side, then used these marks to lay out both sides at once.

THE DADOES. The box above shows how things go from there. I started by cutting the dadoes in both side panels. With the stop in the inner position and the jig aligned on your layout marks, you can cut each dado in a single pass.

RABBETS. When cutting the rabbets, the only difference is that you'll need to add a support for the jig to your setup. The front end of the rabbets should align with the end of the dadoes so you don't need to move the stop.

DOVETAIL SLOTS. After squaring up the ends of the rabbets and dadoes with a chisel, I switched to a 14° dovetail bit to cut the dovetail slots. First, you'll need to move the stop to the outer position. Then the jig can be positioned by simply aligning the edges of the baseplates with the previously cut dadoes. With the jig in place, the depth of cut can be adjusted by setting the router in the jig and lowering the bit until it bottoms out in the dado. Each slot is cut in a single pass.

BACK RABBETS. The last step is to rabbet the back edge of the sides to hold the back assembly. The final drawing above shows how I cut these deep rabbets using a dado blade in the table saw.

How-To: Dadoes, Rabbets, & Slots

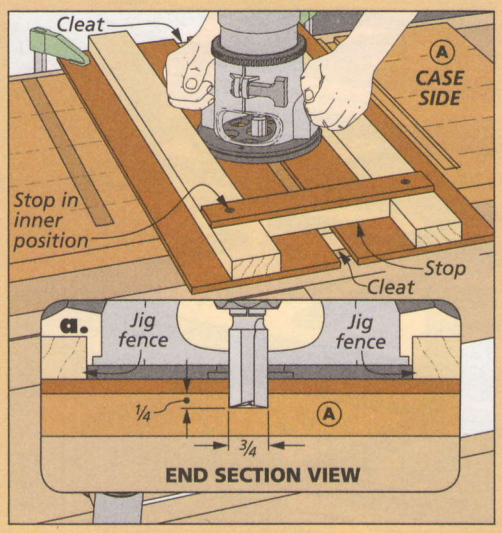

Precise Dadoes. *To position the jig for the dado cuts, align the inside edge of the base with your layout line and clamp it down.*

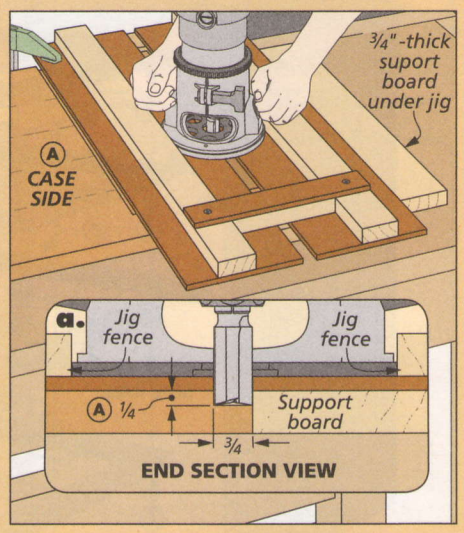

Rabbets. *To rout the stopped rabbets, align the jig with the top and bottom edges of the case side and add a support piece.*

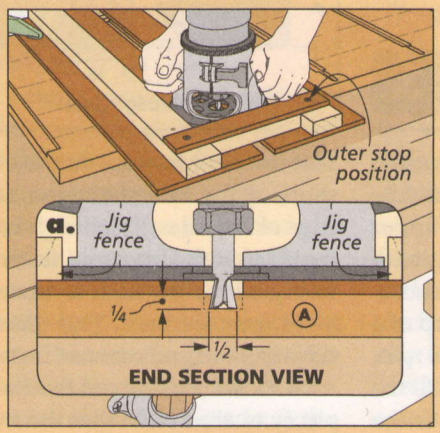

Dovetail Slots. *Simply align the jig with the previously cut dadoes. Then rout the dovetail slots in a single pass.*

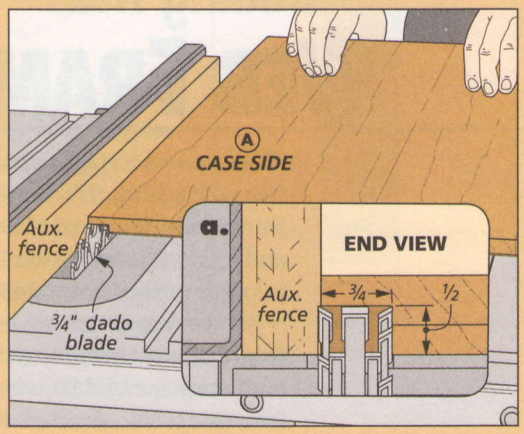

Back Rabbets. *Cut the deep rabbets for the case back with a couple of passes across a wide dado blade buried in an auxiliary rip fence.*

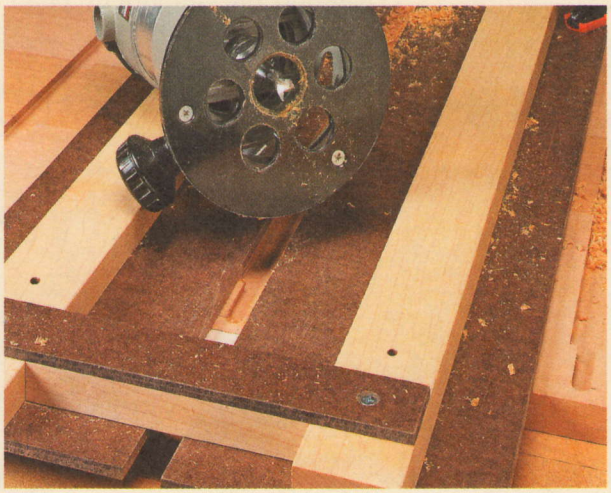

▲ This handy jig can be used to rout accurate dadoes, rabbets, and dovetail slots in the case sides. You'll find details on building the jig on page 30.

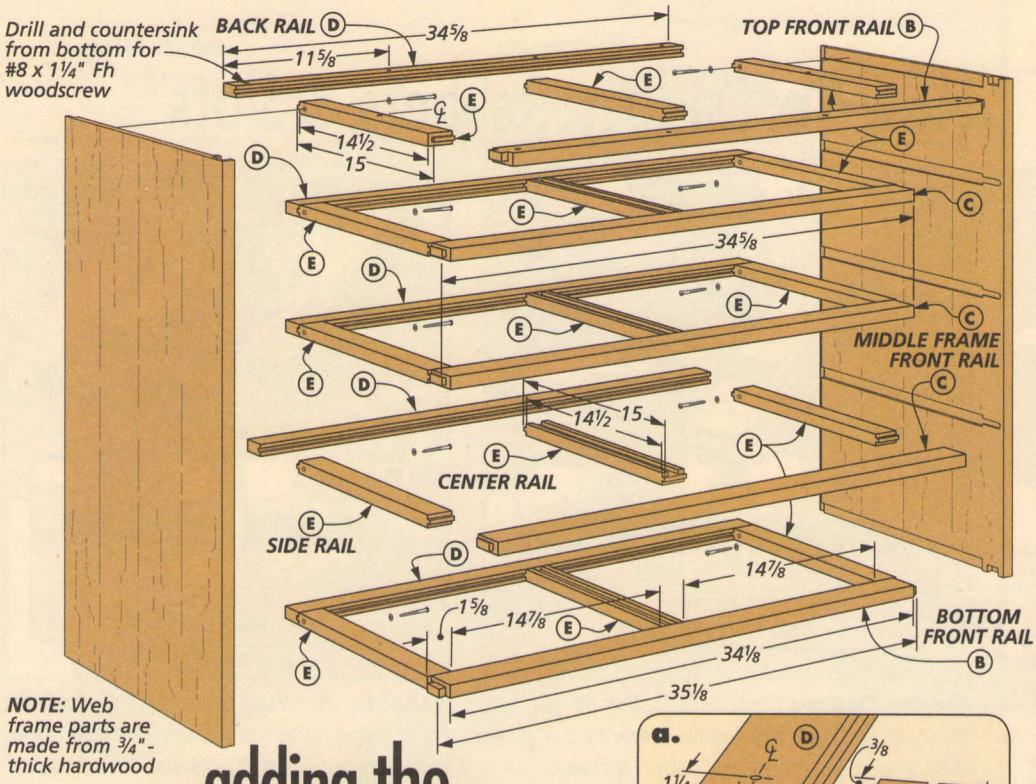

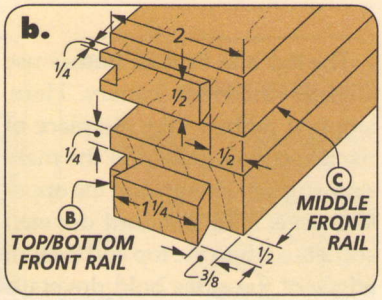

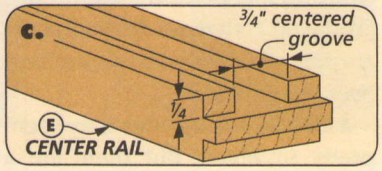

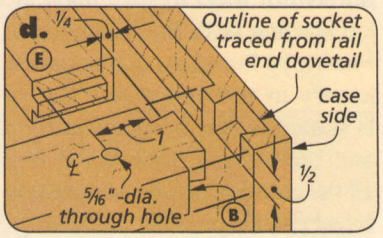

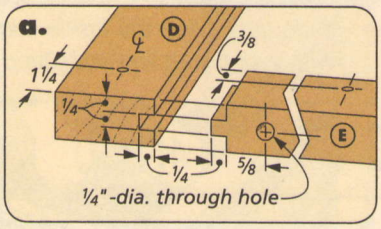

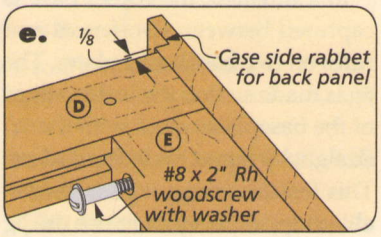

adding the WEB FRAMES

Now you can start work on the five web frames. The three middle frames are identical. The upper and lower frames are similar with a couple of significant differences.

All the frames are made up of a front rail, a back rail, two side rails, and a center rail. Likewise, all the frames are constructed with the same stub tenon and groove joinery. So it makes sense to work on all the frames at once.

Before getting started, let me mention one important point. The frames are sized to stop ⅛" short of the rabbets in the back edge of the sides. They're glued to the sides at the front and fastened with screws through oversized holes near the back. This lets the sides expand and contract freely.

CUT TO SIZE. First, I cut the frame pieces to size. Note that the front rails for the top and bottom frames are ½" longer. This accommodates the large dovetails on the ends.

JOINERY. The box below and detail 'a' show the next steps. First I cut centered grooves in the front and back rails using a standard blade in the table saw. Then the stub tenons on the ends of the side and center rails can be cut with a dado blade buried in an auxiliary rip fence.

RUNNER GROOVE. The center rail of the four lower frames will hold a runner that mates with a guide on the underside of the drawers.

How-To: Grooves & Stub Tenon

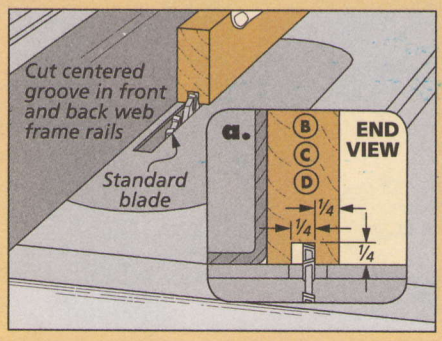

Centered Grooves. *Center the grooves in the front and back rails by flipping the pieces end-for-end between passes.*

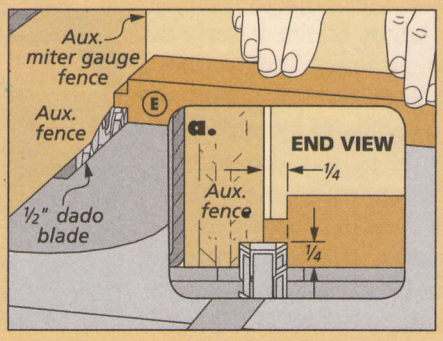

Stub Tenons. *Sneak up on a snug fit to the grooves by tweaking the height of the blade after each pair of passes.*

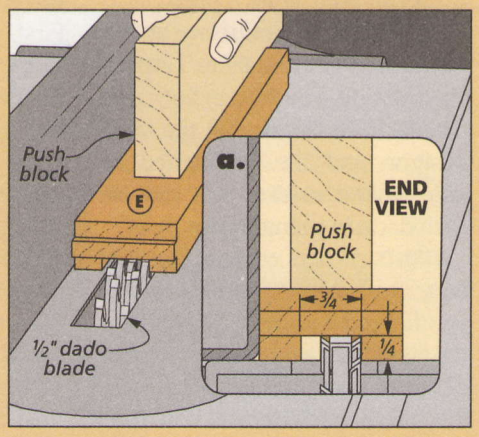

Runner Grooves. *Install a dado blade in the saw to cut the centered grooves in the center rails. Flip the pieces between passes.*

So while you have the dado blade installed, you can cut ¾"-wide centered grooves in these rails. The How-To box on the opposite page gives you guidance.

SLIDING DOVETAILS. Next, the three middle front rails need a sliding dovetail cut on each end. The first drawing at right shows how I did this at the router table using a dovetail bit. A tall fence and a back-up block help steady the long rails. You're shooting for an accurate shoulder-to-shoulder length and a snug, but not overly tight, fit to the dovetail slots. To complete the rails, you'll trim back the front edge as shown in Figure 2.

STANDARD DOVETAILS. With this work completed, I turned my attention to the large dovetails needed on the ends of the top and bottom front rails. You can just follow the three-step process shown at right (Figures 3, 4, and 5).

HOLES. Finally, you need to drill some screw holes. As I mentioned, all of the side rails get an oversized hole near the back (detail 'e', opposite). And the front, back, and side rails of the top frame need countersunk holes for attaching the top. The holes in the front and side rails are oversized to allow for expansion and contraction.

ASSEMBLY. Now you can begin the assembly. First, I dry assembled each frame and marked the exact location of the center rail. Then, once the glue was applied, I made sure all the parts were aligned properly and the frames were square. The standard dovetails on the top and bottom frames should extend ¼" proud of the side rails.

DOVETAIL SOCKETS. Before the case is assembled, the dovetail sockets for the top and bottom front rails have to be cut. I used the assembled frames to lay out the sockets as shown in Figure 6. You can finish the job with a back saw and a sharp chisel (Figures 7 and 8).

CASE ASSEMBLY. I started the assembly by gluing and fastening the top and bottom frames. Then you can slide the three middle frames in from the back. Remember, only the dovetail joints are glued.

How-To: Dovetail Joinery

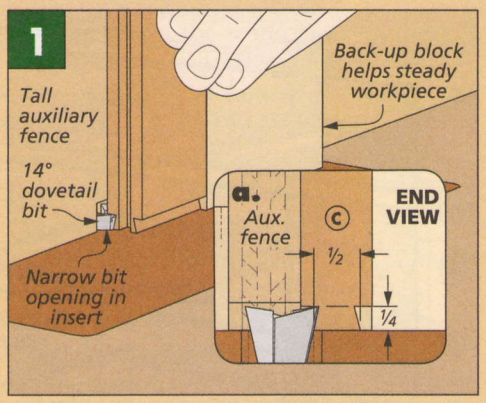

Sliding Dovetails. *You'll hold the rails on end to rout the sliding dovetails. A tall fence and a back-up block help with control.*

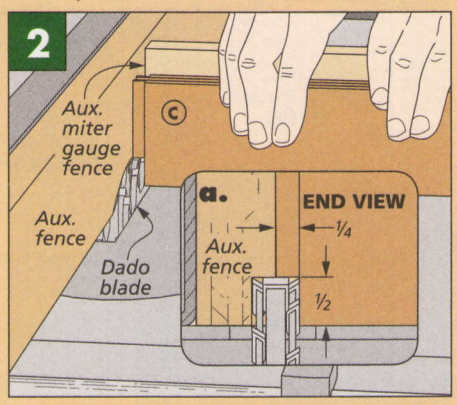

Shoulders. *To complete the sliding dovetails, use the dado blade to cut shoulders on the front edge of the rails.*

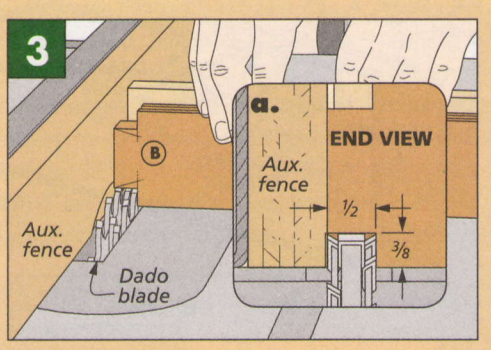

Standard Dovetails. *After laying out the dovetails, I used a dado blade to establish the shoulders and remove the bulk of the waste.*

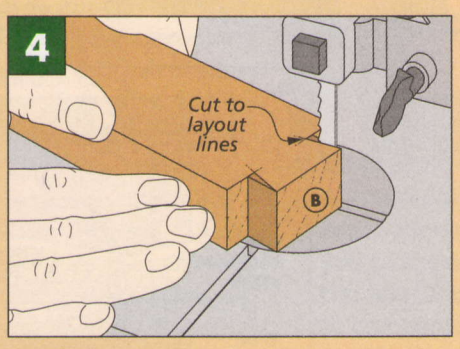

Angled Cuts. *An easy way to complete the dovetails is to take the rails to the band saw. Cut right along your layout line.*

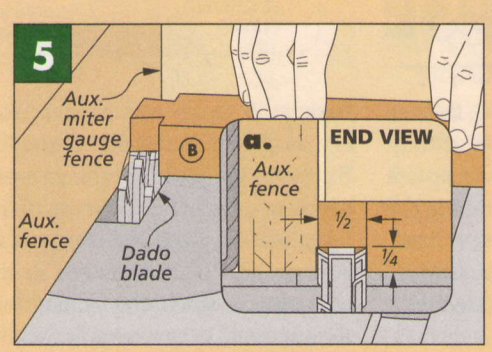

A Shoulder. *To add racking resistance and make cutting the sockets easier, I cut a shoulders on the inside face of each dovetail.*

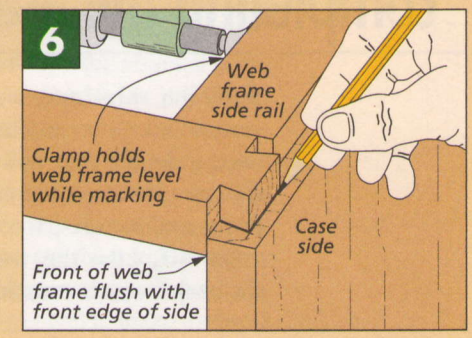

Lay Out Sockets. *You can clamp the assembled web frame to the case side to mark for the dovetail sockets.*

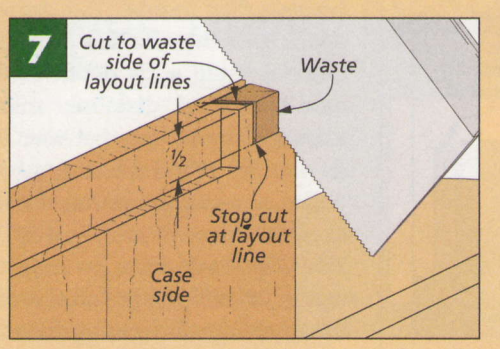

A Saw Cut. *To remove the waste from the dovetail socket, start by using a back saw to define the outside edges with an angled cut.*

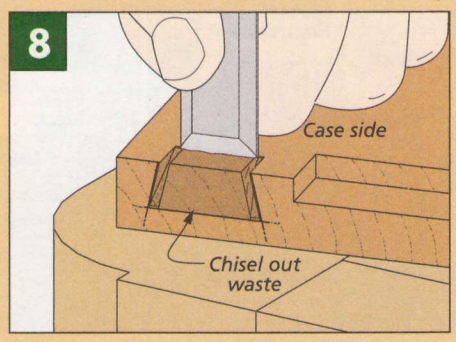

Chisel Out the Waste. *Use alternating cuts from the face and the end to chip the waste from the dovetail socket.*

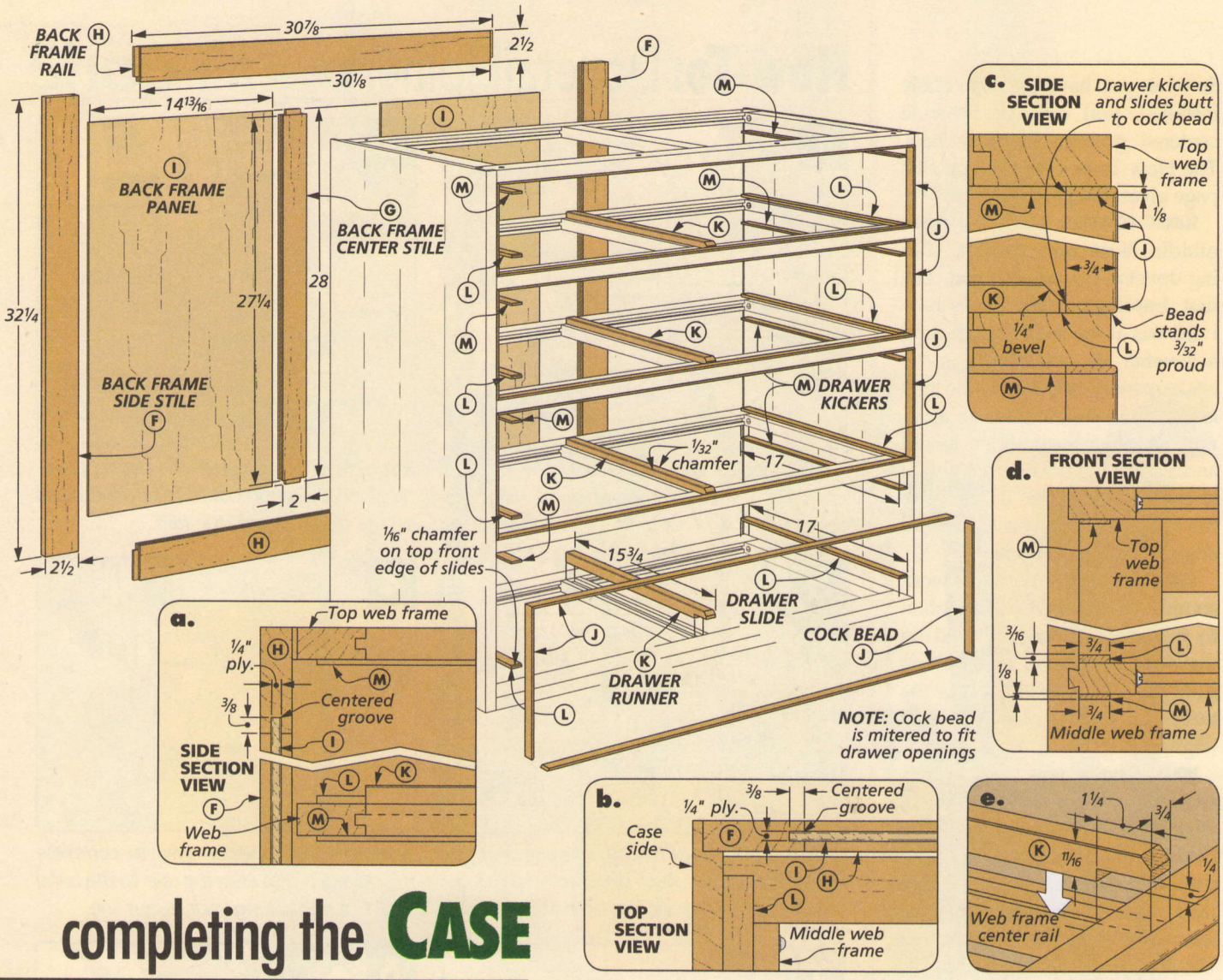

completing the CASE

With the sides and web frames assembled, you can start adding all the details that will complete the case. Making and installing the frame and panel back comes first.

THE BACK. Like the web frames, the back frame is constructed with basic stub tenon and groove joinery, as shown in details 'a' and 'b.' But here, the width of the grooves needs to match the thickness of the ¼" plywood used for the panels. And to add extra strength to the assembly, I glued the panels into the grooves. When completed, the assembly can be glued into the rabbets in the case sides.

COCK BEADING. Adding the cock beading that frames the drawer openings is the next task. This traditional detail adds depth to the case front and disguises minor variations in the gaps between the drawer fronts and the case.

The two-step procedure I used to make the bead is shown in the Shop Tip at left. Then it's simply a matter of mitering the pieces to fit the openings and gluing them in place (detail 'c'). A rabbeted gauge block, as described on page 31, will help you position the bead. I used spring clamps to hold the pieces while the glue dried.

RUNNERS, SLIDES, & KICKERS. Now it's time to finish up the inside of the case. This involves adding runners to the center web frame rails and slides and kickers to the side rails.

The runners are sized to fit the grooves in the rails and notched to fit over the front rail, as in detail 'e.' A bevel on the front edge makes installing the drawer easier.

The slides and kickers can simply be cut to size and glued in place. The slightly thicker slides sit proud of the bead molding so the drawers won't rub. The kickers installed on the underside of the web frames are flush with the bead molding.

Shop Tip: Cock Bead

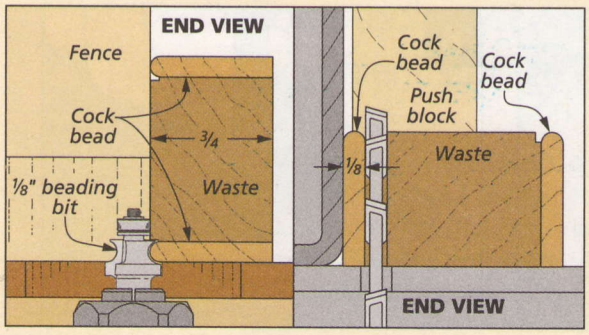

Rout and Rip. *You can quickly make the bead by routing the profile on two edges of a blank and then ripping it free. Repeat as many times as necessary.*

BUILDING THE BASE

The foundation for the case consists of a molded base assembly and a set of traditional ogee bracket feet. The look is both refined and solid.

I made and installed the base assembly first. The assembly is built up from two separate layers, as you can see in the drawing and detail 'c' at right. The upper layer is a four-sided frame that includes a plywood dust panel. The lower layer simply consists of three pieces of molding that are mitered and glued around the front and sides of the upper frame.

BASE FRAME. The base frame uses miter joints in the front corners while the back rail is joined to the side rails with stub tenons. The dust panel is captured in grooves cut in all four pieces.

To build the frame, you just need to tackle things in the right order. After cutting all the pieces to width and rough length, you can cut grooves for the dust panel. Next, you want to miter the front corners and crosscut the sides to final length. Finally, cut the back rail to length and add the stub tenons.

Once the frame is glued up, the molding profiles can be routed. Leaving this for last makes clamping up the frame easier. The box below gives the details on this step. Then before starting on the base molding, I drilled the screw holes needed to attach the assembly.

BASE MOLDING. You can add the lower molding to the base frame one piece at a time. Here I reversed the order and routed the cove profile on the pieces before fitting and gluing them in place (How-To box below). Finally, to install the completed base assembly, I turned the case upside down.

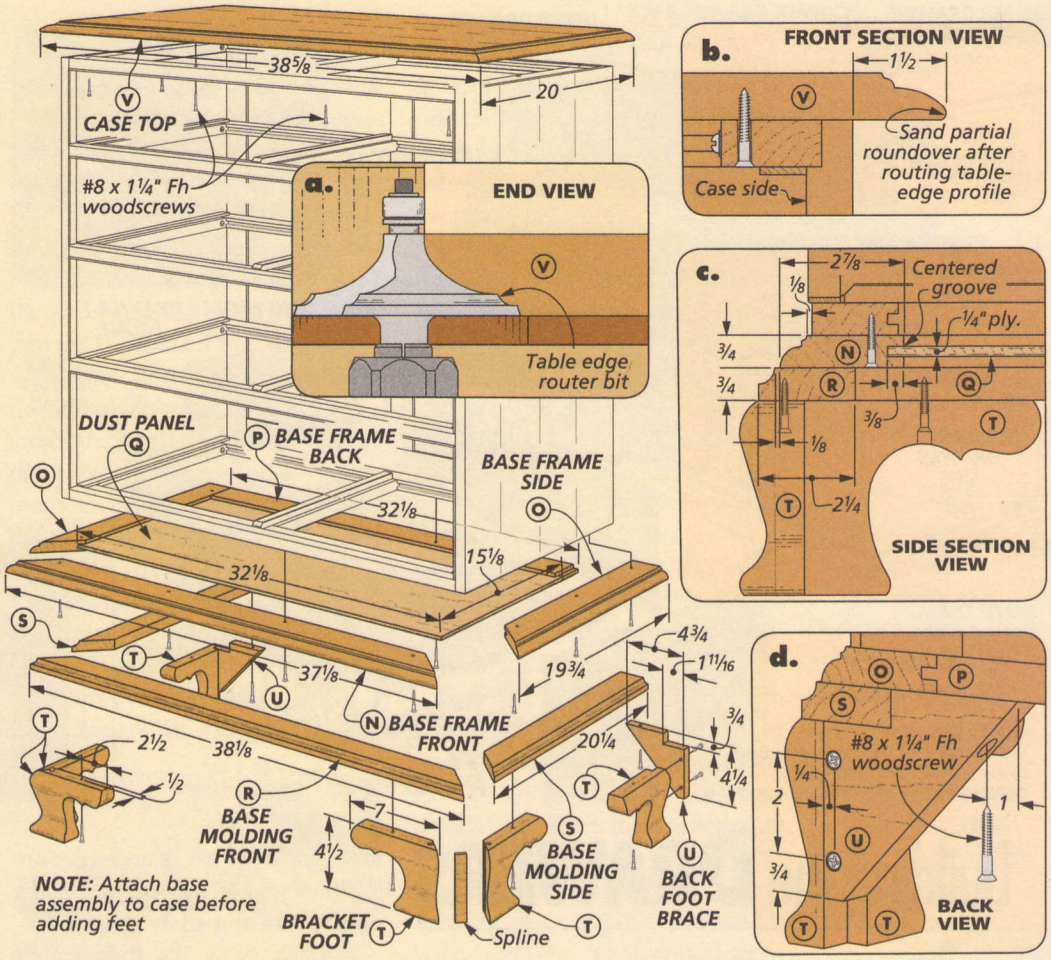

BRACKET FEET. The next challenge is making the bracket feet. This is easier than you might think. You'll find step-by-step instructions starting on page 42. And when the feet are ready, glue and screw them in place (details 'c' and 'd').

TOP. With the feet in place, the case can be turned upright to work on making and installing the top. First, you'll need to glue up an oversized panel from ¾"-thick stock. After cleaning it up, and trimming it to final size, you can add the thumbnail and bead edge treatment. This looks tricky, but a special "table edge" bit in the router table makes the job easy (detail 'a'). Just take light passes raising the bit in between.

The router bit leaves a sharp edge on the underside of the top. So I used sandpaper to soften it. Blend the thumbnail profile into a slight roundover as in detail 'b'.

The top is attached with screws through the holes in the top web frame (detail 'b'). Note that when flush at the back, the overhang on the front and sides is different.

How-To: Base Frame & Molding Profiles

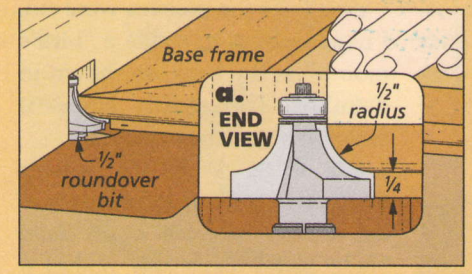

First, a Roundover. *The base frame profile is routed in two steps. Start by routing a roundover on the front and sides.*

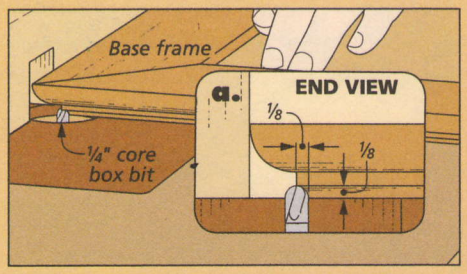

A Small Cove. *You'll complete the profile by routing a small cove into the shoulder left by the roundover bit.*

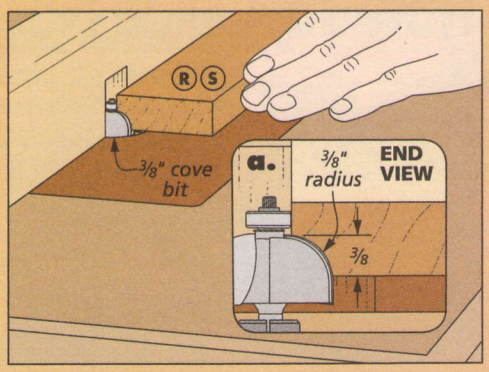

A Larger Cove. *The base molding is shaped before being fit. I routed a cove profile on the edge of the individual blanks.*

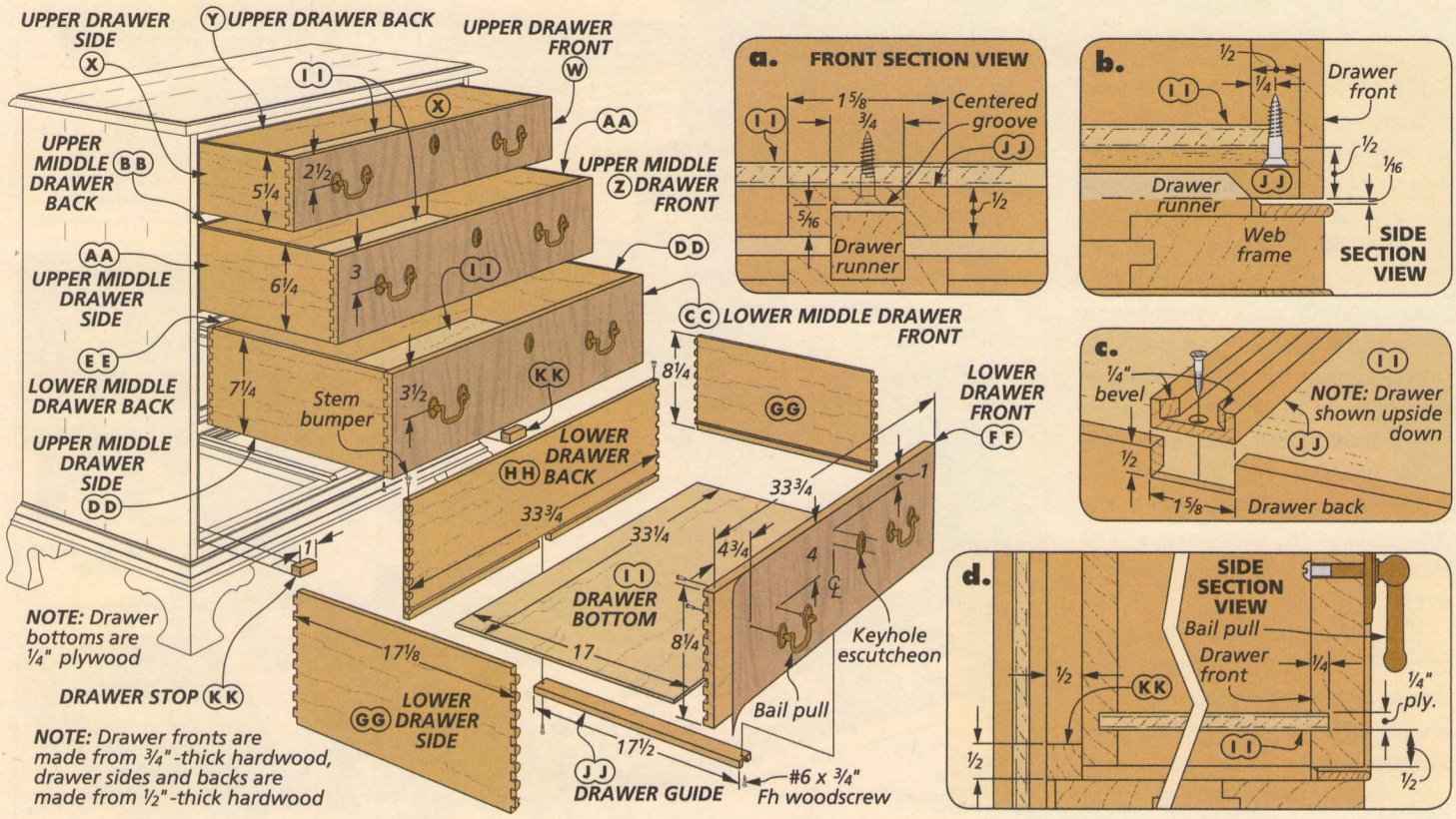

building the DRAWERS

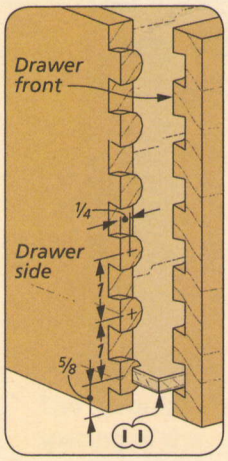

Building the four graduated drawers will wrap things up. There's nothing out of the ordinary about the basic construction — I used half-blind dovetails at the front and back. However there are a couple of extra details that keep the work interesting. You'll add guides to the undersides of the drawers. And the last step is to veneer the fronts with ribbon-figure mahogany.

THE PARTS. To get started, you can cut the fronts, backs, and sides to size. The fronts are 3/4"-thick mahogany, the backs and sides are 1/2"-thick maple. Be sure to spend a minute labeling all the pieces.

DOVETAILS. Now it's time to get out your dovetail jig. This routine is probably familiar to you. The drawers are sized for dovetails with 1" spacing, as in the detail drawing in the left margin. The dovetails at the front and back are identical. I used several test pieces to check the setup of the jig, then started routing dovetails.

BOTTOM GROOVES. After putting the jig away, I took all the pieces to the table saw to cut grooves for the bottoms. You want to size the grooves to fit the 1/4" plywood you'll use. Just be sure to cut the grooves on the inside faces.

GUIDES. Before assembling the drawer boxes, I got a start on adding the guides. The grooved guides fit into notches cut in the drawer fronts and backs (How-To box and detail 'c'). It's easier to cut the through notches in the backs before assembly, while the blind notches in the fronts are best cut after assembly. And in order to size and position the notches accurately, I made the guides first.

The guides are cut to size from 1/2"-thick stock. Then I installed a dado blade in the table saw to cut a centered groove in each guide. The groove should be a hair wider than the width of the runners in the case — no more than 1/32". You can test the fit directly. The guides should slide easily without much play.

And once the grooves were cut, I used a chisel to create a "bird's mouth" at the back, as shown in detail 'c.' This simply makes it easier to install the drawers.

BACK NOTCH. With the guides made, you can cut the notches in the drawer backs to fit. A dado blade in the table saw makes it easy to accurately size and center the notch, as shown at left. And with the notches completed, I cut

How-To: Guide Notches

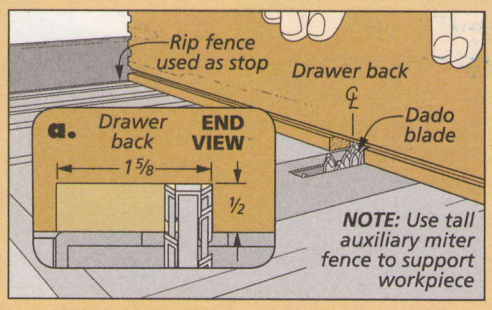

Back Notch. *You can both accurately size and center the notch in the back by flipping it end-for-end between passes across a dado blade.*

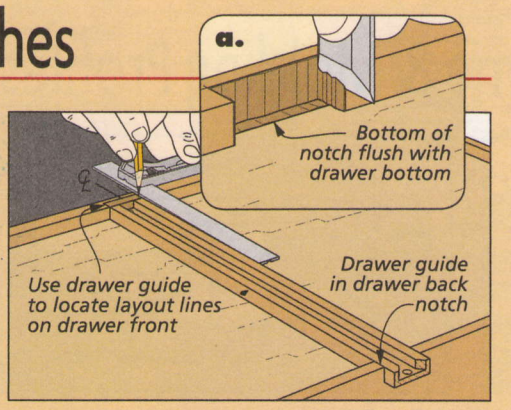

Layout. *To lay out the location of the blind notch, place the guide in the back notch and then square it to the drawer front.*

the plywood bottoms to size and started the assembly.

INSTALL RUNNERS. With the drawer boxes assembled, it's time to complete the installation of the guides. First I used the guides to lay out the blind notches in the drawer fronts, as shown in the How-To box on the opposite page. Then I chiseled out the waste. Go easy so you don't split the narrow bridge at the front of the notch. When this is completed, you can install the guides with a countersunk screw at each end (details 'b' and 'c').

STEM BUMPERS. One small detail and you're ready to veneer the fronts. I installed plastic stem bumpers in the topside of the backs near each corner. The stem bumpers make the drawers slide a little smoother.

VENEER. Adding the veneer to drawer fronts is actually pretty straightforward. My goal was to apply the veneer so that the figure would appear to run continuously from one drawer front to another. I accomplished this by cutting the pieces in order from a large sheet of paper-backed veneer. And to simplify applying the veneer, I used contact adhesive to create an instant bond. You'll find more on the veneering process on page 31.

Once the drawer stops (detail 'd') and the period hardware are installed, it's into the finishing room. And a couple of days later out will come a true classic.

Materials, Supplies & Cutting Diagram

A	Case Sides (2)	3/4 x 19 - 32 1/4
B	Top/Btm. Web Frame Frt. Rails (2)	3/4 x 2 - 35 1/8
C	Mid. Web Frames Frt. Rails (3)	3/4 x 2 - 34 5/8
D	Web Frame Back Rails (5)	3/4 x 1 5/8 - 34 5/8
E	Web Frame Side/Ctr. Rails (15)	3/4 x 1 5/8 - 15
F	Back Frame Side Stiles (2)	3/4 x 2 1/2 - 32 1/4
G	Back Frame Ctr. Stile (1)	3/4 x 2 - 28
H	Back Frame Rails (2)	3/4 x 2 1/2 - 30 7/8
I	Back Frame Panels (2)	1/4 ply. - 14 13/16 x 28
J	Cock Bead (1)	1/8 x 3/4 - 30 lin. ft.
K	Drawer Runners (4)	11/16 x 3/4 - 15 3/4
L	Drawer Slides (8)	3/16 x 3/4 - 17
M	Drawer Kickers (8)	1/8 x 3/4 - 17
N	Base Frame Front (1)	3/4 x 2 7/8 - 37 1/8
O	Base Frame Sides (2)	3/4 x 2 7/8 - 19 3/4
P	Base Frame Back (1)	3/4 x 2 1/2 - 32 1/8
Q	Dust Panel (1)	1/4 ply. - 15 1/8 x 32 1/8
R	Base Molding Front (1)	3/4 x 2 1/4 - 38 1/8
S	Base Molding Sides (2)	3/4 x 2 1/4 - 20 1/4
T	Bracket Foot Blanks (3)	1 1/2 x 4 1/2 - 16
U	Back Foot Braces (2)	3/4 x 4 1/4 - 4 3/4
V	Case Top (1)	3/4 x 20 - 38 5/8
W	Upper Drawer Front (1)	3/4 x 5 1/4 - 33 3/4
X	Upper Drawer Sides (2)	1/2 x 5 1/4 - 17 1/8
Y	Upper Drawer Back (1)	1/2 x 5 1/4 - 33 3/4
Z	Upper Mid. Drawer Front (1)	3/4 x 6 1/4 - 33 3/4
AA	Upper Mid. Drawer Sides (2)	1/2 x 6 1/4 - 17 1/8
BB	Upper Mid. Drawer Back (1)	1/2 x 6 1/4 - 33 3/4
CC	Lower Mid. Drawer Front (1)	3/4 x 7 1/4 - 33 3/4
DD	Lower Mid. Drawer Sides (2)	1/2 x 7 1/4 - 17 1/8
EE	Lower Mid. Drawer Back (1)	1/2 x 7 1/4 - 33 3/4
FF	Lower Drawer Front (1)	3/4 x 8 1/4 - 33 3/4
GG	Lower Drawer Sides (2)	1/2 x 8 1/4 - 17 1/8
HH	Lower Drawer Back (1)	1/2 x 8 1/4 - 33 3/4
II	Drawer Bottoms (4)	1/4 ply. - 17 x 33 1/4
JJ	Drawer Guides (4)	1/2 x 1 5/8 - 17 1/2
KK	Drawer Stops (8)	1/2 x 1/2 - 1

- (8) Rosette Bail Pulls
- (4) Keyhole Escutcheons
- (8) Plastic Stem Bumpers
- (1) 4' x 8' Ribbon-Figure Mahogany Veneer
- (10) #8 x 2" Rh Woodscrews w/Washers
- (34) #8 x 1 1/4" Fh Woodscrews
- (8) #6 x 3/4" Fh Woodscrews

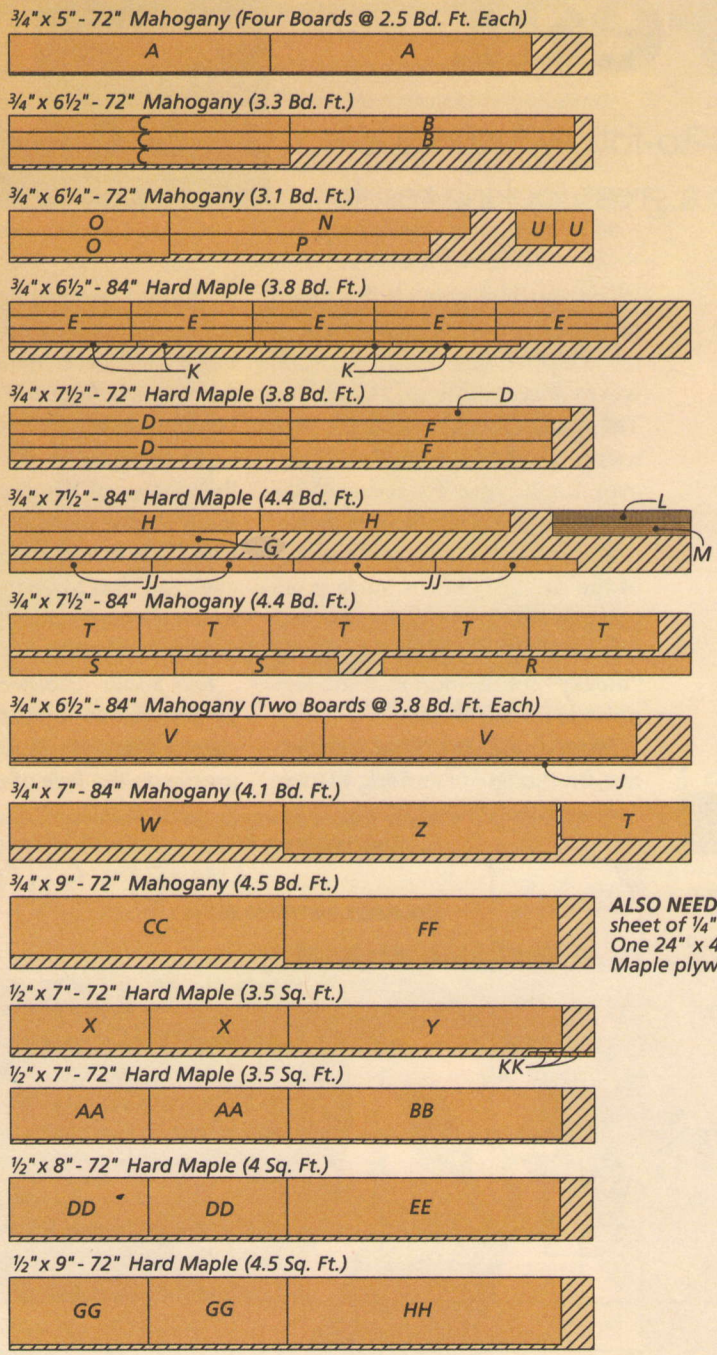

***ALSO NEEDED:** One 48" x 96" sheet of 1/4" Maple plywood. One 24" x 48" sheet of 1/4" Maple plywood*

making Ogee Bracket Feet

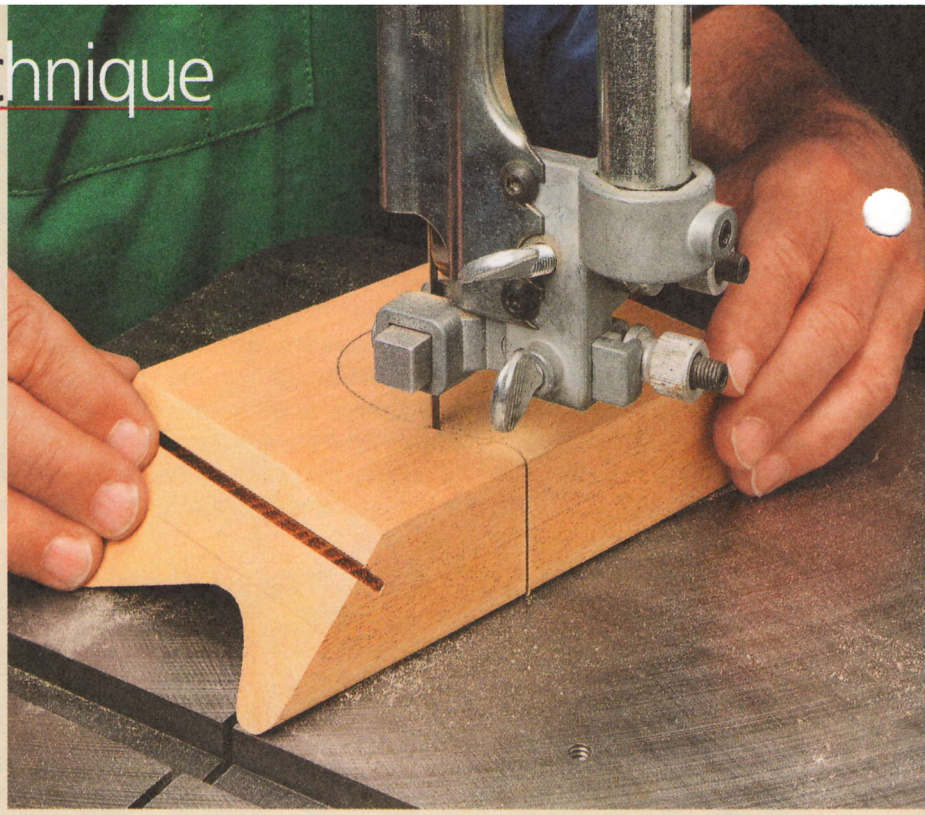

An easy-to-follow technique leads to a great-looking result.

When you think about it, the design of the ogee bracket feet used on the Chippendale chest (page 32) works successfully on two levels. The graceful elegance of the contoured feet is hard to miss. However, underlying this refined look you get a real sense of sturdiness.

To me, that's the big attraction of the design. On the surface, all you see are the fluid curves. And this masks the very solid, almost "blocky" foundation that the legs provide for the chest.

From a woodworking perspective, the thought of forming all these contoured surfaces can be intimidating. But you'll find that making the bracket feet is a straightforward process. Much of the shaping can be done at the table saw and band saw. All you'll need to do is refine the contours. Keep in mind that the main goal is to come up with finished feet that are pleasing to the eye. You don't need to worry too much about an exact match to the pattern or even to one another.

FOUR STAGES. The process can be broken down into four general stages. First, you'll form the ogee profile on the face of a set of three foot blanks. Next, you'll separate the blanks — mitering the front legs and simply squaring the back legs. Then the end profiles can be cut (photo above). Finally, you can assemble the miter joints and add braces to the back legs.

BLANKS. To get started, I glued up 1½"-thick blanks from two pieces of ¾"-thick stock. The joint line won't show and this saves having to buy expensive thick stock. You'll need three blanks with a finished size of 4½" by 16".

TEMPLATE. Before going further, you'll need to have a template to

Woodsmith GO ONLINE EXTRAS

To download a full-size foot pattern and find plans for a simple parallelogram gauge, visit our website at Woodsmith.com

FOOT BRACKET PATTERN
(One Square = ¼")

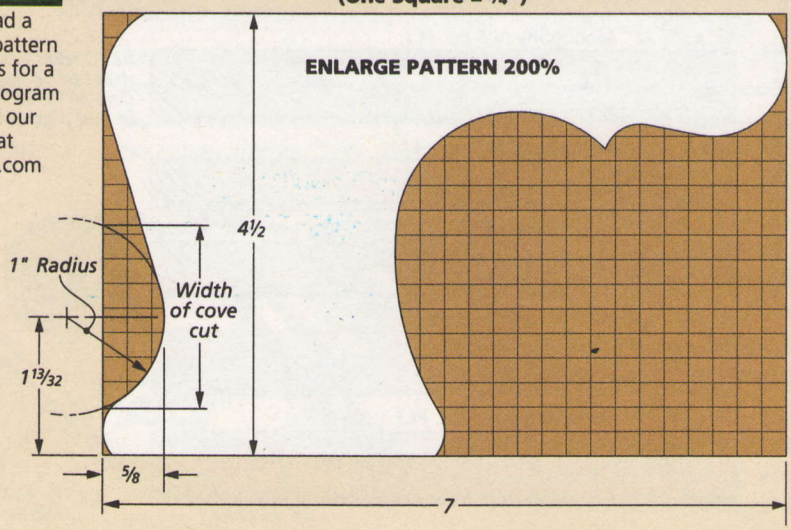

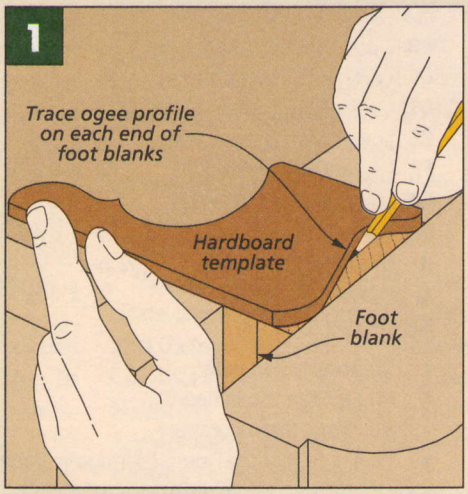

Ogee Profile Layout. *A layout traced on both ends of each blank will be your guide when shaping the ogee profile.*

mark the layout on the blanks. You can use the pattern on the opposite page to make a foot template from ¼" hardboard or plywood. The template will guide your work from here on out so take your time. Once the template is ready, you can use it to lay out the ogee profile on both ends of each blank, as shown in Figure 1.

FIRST, A COVE. With the blanks laid out, the next step is to start roughing out the ogee profile by making a cove cut at the table saw. This is done by sandwiching the blank between a pair of fences and passing it over the blade.

Figures 2 and 3 show how to set up the saw for the cove cuts. First, you'll raise the blade to the final depth of the cut and mark the front and back edge of the blade using masking tape. Then I used a parallelogram gauge set to the width of the cove cut (see pattern) to find the fence angle and mark a line. Note that the fence has to be offset from the line, as shown in Figure 4.

When the setup is complete, you can cut the coves by making multiple light passes (Figure 4). Stop just a hair shy of your layout line.

ANGLED CUTS. Now, you'll continue to rough out the profile with a couple of angled saw cuts. The first cut shown in Figure 5 removes waste at the upper edge of the cove cut. This is a "trapped" cut so be sure to use a push block and a featherboard. A second cut at 45° begins to shape the rounded section at the top of the foot (Figure 6).

THE TOE. To form the lower portion of the rounded toe, I saved time and effort by taking the blanks to the router table. Figure 7 shows how to rout the toe profile with a ⅜" roundover bit.

REFINE THE PROFILE. The final shaping of the profile involves patient hand work. You need to blend all the individual cuts into one smooth contour. A block plane or a rasp will do the initial work (Figure 8). The layout lines on the ends of the blank can be used to guide your progress. When the profile looks close, a thorough sanding will complete the job (Figure 9).

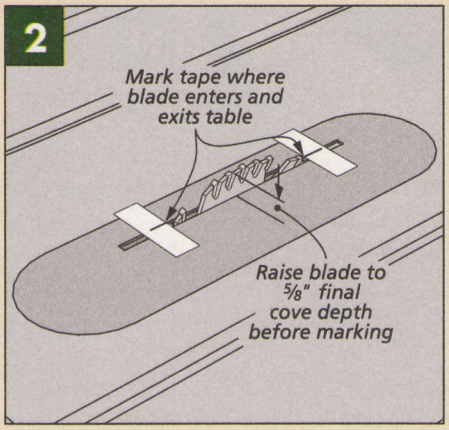

Mark Blade Limits. *With the blade raised to final depth, of the cove cut (⅝"), mark where it enters and exits the table.*

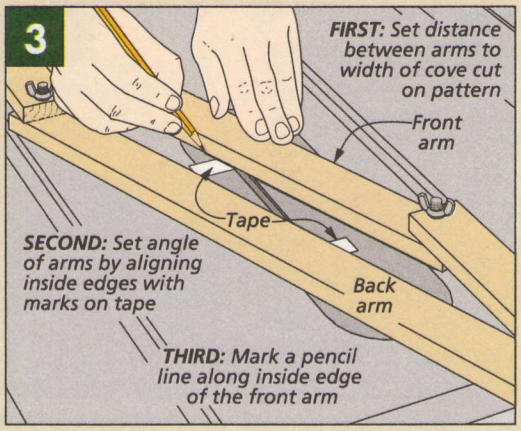

Find Fence Angle. *To mark the fence angle, place the gauge over the blade and rotate it until the long arms touch the marks on the tape.*

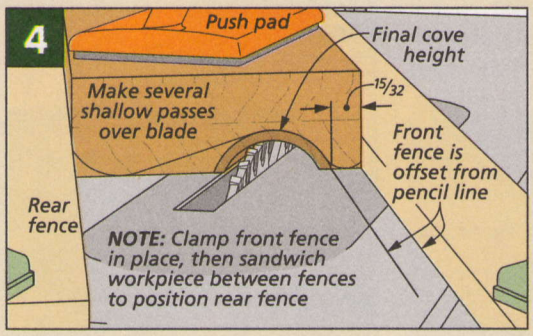

The Cove Cuts. *Start cutting the cove with a 1/16"-deep pass. Raise the blade in small increments and repeat, stopping just short of the layout line.*

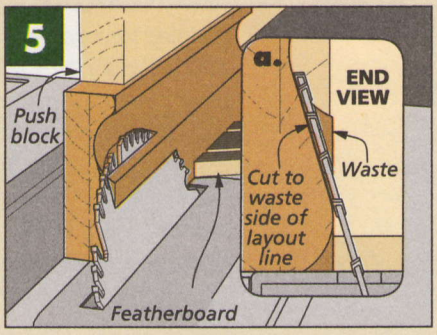

Shallow Angled Cut. *I removed the waste above the cove cut with a carefully made, angled saw cut.*

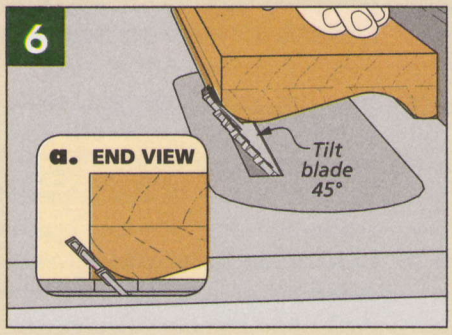

A 45° Cut. *You can begin to form the upper rounded section with a 45° cut made just to the outside of your line.*

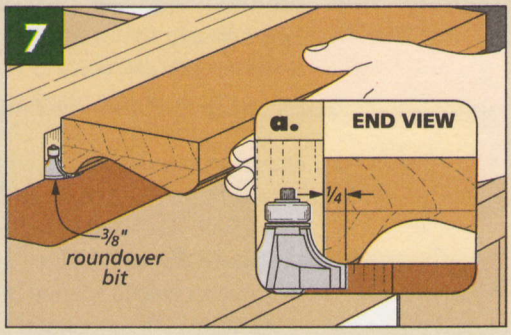

Rout the Toe. *A roundover bit in the router table will quickly and accurately form the profile needed on the lower portion of the toe.*

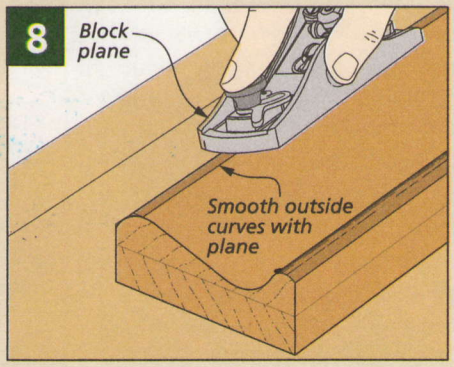

Smooth Curves. *I used a block plane to round the outside curves, referring to the layout lines often as I worked.*

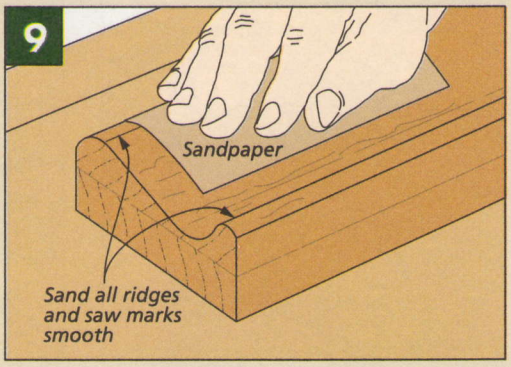

A Final Sanding. *Use coarse sandpaper to remove any remaining ridges and finish smoothing the contours. Then work up to 180-grit.*

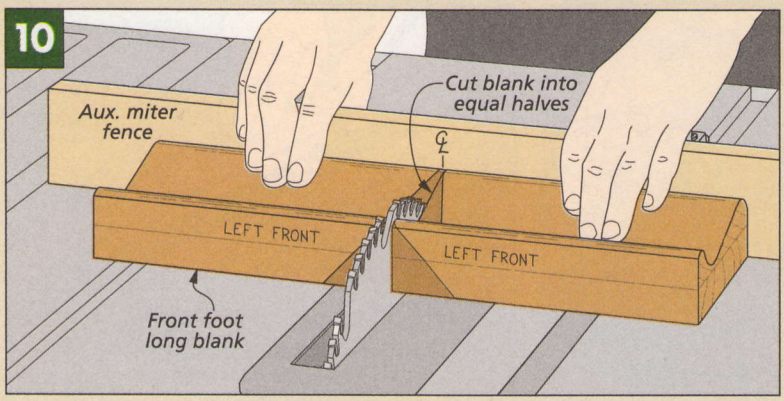

Two Sections. *Before you take the blanks to the table saw, look them over and pick the two best to use for the mitered front feet. After marking all three blanks clearly, crosscut them into two equal sections.*

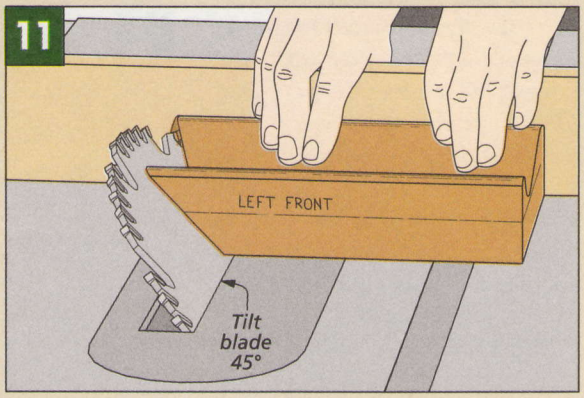

Miters. *You'll only miter the sections that will make up the two front feet. And for a good profile match, be sure to cut the miters on the crosscut ends.*

COMPLETING THE FEET

Shaping the ogee profile on the face of the blanks is probably the most time-consuming part of the job. Now that this is done, things start to move a little quicker.

TWO SECTIONS. The next task is to separate each blank into two sections, as seen in Figure 10. Two of the blanks make up the mitered halves of the front feet. The third blank is used for the back feet.

Before doing any cutting, I picked out the two best-looking blanks to use for the front feet. Then I labeled them clearly to avoid any confusion later on. You want to keep the two sections of one blank together in each glued-up foot. This will ensure that you end up with consistent figure and color in the finished foot. And likewise, the ogee profile of the two halves of each foot is guaranteed to match.

THE MITERS. After crosscutting each blank, set the two sections for the back feet aside. Your next task is to miter the sections of each front blank into a square corner, as illustrated in Figure 11. This is pretty straightforward. Your goal here is to make sure the mitered halves of each foot form a tight, square joint. And take care to cut the miter on the marked ends.

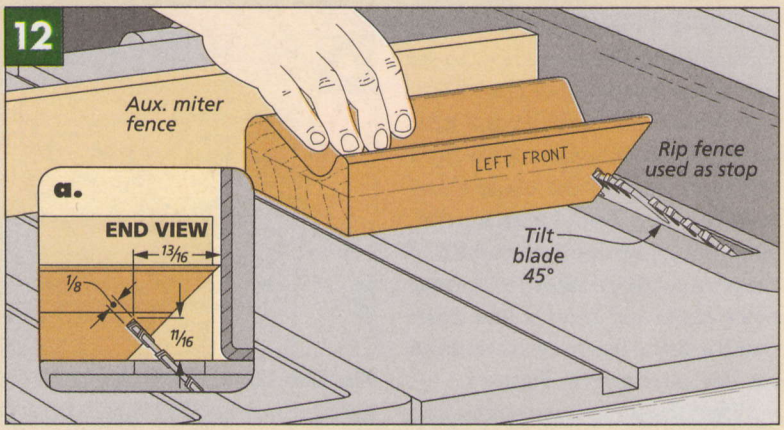

Spline Slots. *To strengthen the joints and help keep the pieces aligned at glueup, I cut slots for hardwood splines in the mitered faces. The saw blade is tilted to 45° and the rip fence is set to position the slots.*

SPLINE SLOTS. You won't glue up the mitered halves until after the scalloped end profiles are shaped. But in order to make the eventual job easier and the joint stronger, I cut slots for hardwood splines in the mitered faces. The table saw technique I used to do this is shown in Figure 12. Each slot is made with a

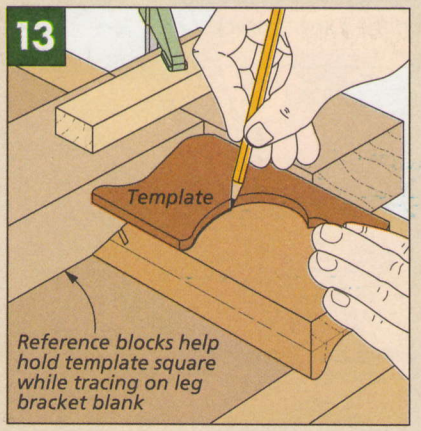

Trace Pattern. *I used the template to trace the scalloped end profile on the back of each foot section.*

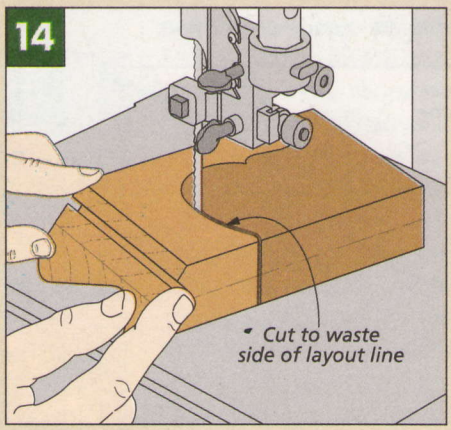

Cut to Shape. *When cutting the end profiles, use a narrow blade and try to cut just to the outside of the layout line.*

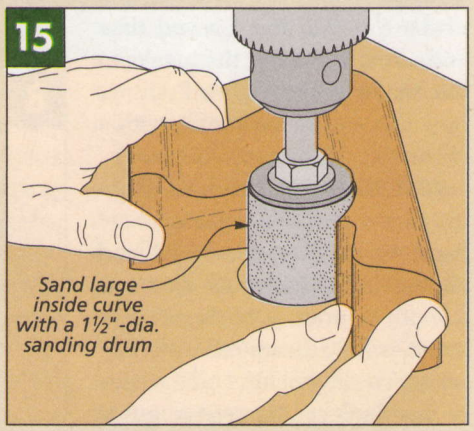

Sand Smooth. *A sanding drum in the drill press will greatly shorten the time spent smoothing the band saw cuts.*

single saw cut. You'll want to use the rip fence as a stop to guarantee that the slots line up.

Once the slots were completed, I cut a couple of hardwood splines to fit. For maximum strength, and to avoid problems with wood movement, you want the grain of the splines to run across the joint (the short dimension).

END PROFILES. The next few steps will bring a big change to the appearance of all the pieces. You're going to lay out and cut the scalloped profiles on the ends.

Since the ogee profile is shaped on the front of the pieces, you'll lay out the end profiles on the back side and then cut them to shape face down. This worked well for me.

Take a look at Figure 13 to see how I accurately positioned the template to mark the profile on the mitered pieces. I snugged both the template and the foot piece up to a thick reference block. The end profiles on the back feet can be laid so that the overall length is 6⅛". And keep in mind that the two back feet should be mirror images.

CUT & SMOOTH. Your next stop is the band saw where you'll cut the profiles to shape, as seen in Figure 14. Once again, this is a pretty routine task. But I will offer a couple of helpful pointers. First, it will be easier to negotiate the tighter curves of the profile with a narrow band saw blade — 3/16" or ⅛". Second, you'll reduce the time spent cleaning up the cuts if you stay just to the outside of the layout line.

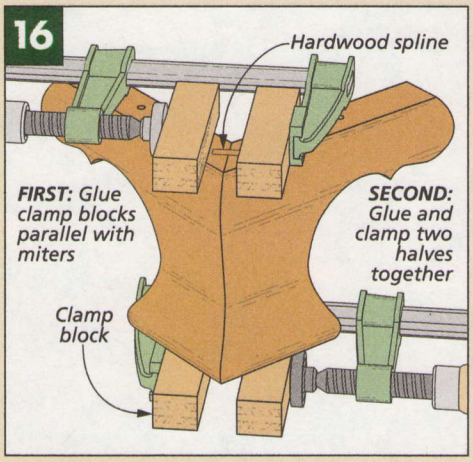

Clamping Blocks. *Small plywood blocks temporarily glued to the mitered sections provide a solid clamping surface.*

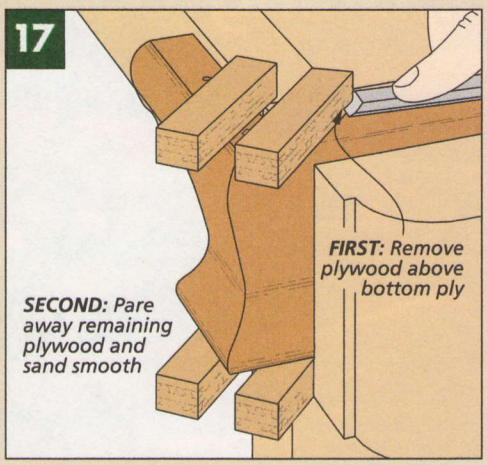

Clean Up. *Once the glue is dry, the blocks are removed by carefully splitting them between the veneers and paring away any remains.*

A sanding drum in the drill press will make smoothing the band saw cuts and further refining the profile go quicker (Figure 15). I used sandpaper wrapped around a section of dowel on the tight, upper curves. And I took extra care to maintain the sharp point on the underside of the end profile.

ASSEMBLY. Now the two halves of the front feet can be glued together. The catch is that there's no easy way to apply good clamping pressure across the miter joints. You can solve this problem by gluing temporary plywood clamping blocks to the top and bottom of each piece, as shown in Figure 16. The blocks provide a solid, square surface to clamp across.

When the glue is dry and the clamps come off, use a chisel to split the clamping blocks away from the feet. Finally, pare and sand away any remaining plywood veneer and glue residue (Figure 17).

BACK LEG BRACES. Now the back feet need a little more work. The one-piece back feet are reinforced with braces, as in the bottom left drawing. The braces are held in rabbets on the inside edge of each foot. A look at Figure 18 shows how I cut these rabbets on the table saw.

The braces are beveled on one side and then notched to fit over the base molding on the underside of the case (Figure 19). I cut them to shape and checked the fit to the case before attaching them to the legs with a pair of screws (left drawings below).

Now all that's missing are the countersunk screw holes used to attach the feet. Here, you'll find that it's easier to drill these holes with the feet in position on the overturned case.

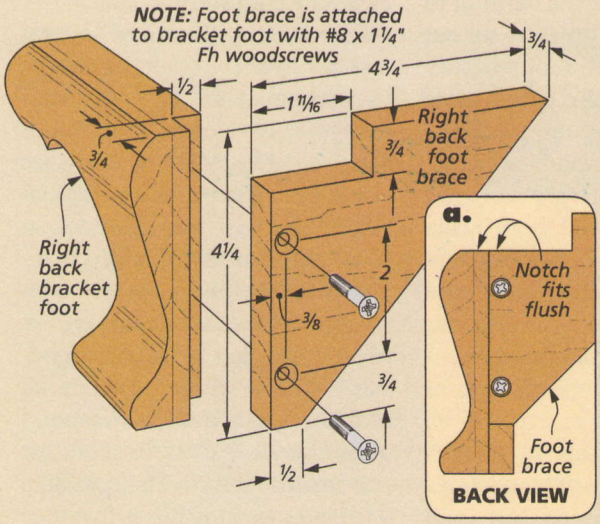

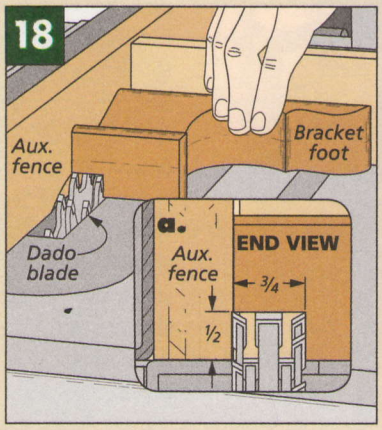

Rabbet for Brace. *I used a dado blade buried in an auxiliary fence to rabbet the back feet for the braces.*

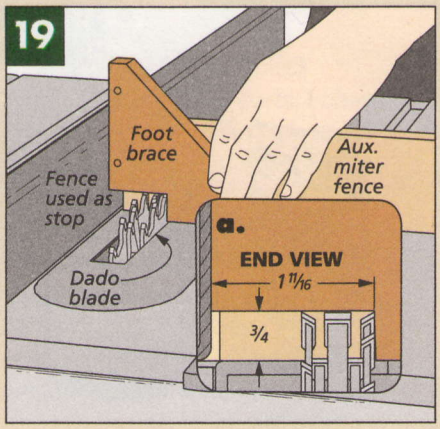

Notch Brace. *You'll need to cut a notch in the top edge of the brace sized to fit over the base molding on the case.*

facts about Food-Safe Finishes

Choosing a finish that looks good and is safe to use isn't nearly as difficult as you might think.

▲ While all of these finishes are considered "food-safe," the type of ingredients they contain varies widely.

Deciding a finish for a project that will come into contact with food always gives me pause to think. I certainly don't want to put a finish on a bowl that may be harmful to the people who use it. So I set out to learn a little more about finishes that are recommended as being safe for use on bowls, cutting boards, utensils, and even children's toys.

Before getting started though, I want to discuss what I mean by the term food-safe finish. Nearly all finishes are considered non-toxic after they're fully cured — even those that use metallic drying agents containing cobalt, zirconium, zinc, or manganese. So in some respects, all finishes are "food-safe."

Despite this, a lot of woodworkers (myself included) are still reluctant to use a finish containing potentially harmful chemicals on an item intended for food contact. The reasoning here is that it's better to be safe than sorry.

Fortunately, there are several finishes available that are free of toxic chemicals. These are what are typically referred to as "food-safe" finishes. Most of these are either oils, waxes, or a combination of the two. Here's a look at some of the more common ones.

COOKING OILS. Vegetable oil, corn oil, peanut oil, and olive oil are often suggested as simple, food-safe finishes. And although all of these can be used as finishes, I generally steer clear of them for one main reason. The problem with most cooking oils is that they

break down quickly and turn rancid when exposed to air.

WALNUT OIL. A lesser known oil for finishing is walnut oil. Walnut oil is a natural drying oil. It's often sold in grocery stores as a salad oil. But when sold as a finish (through woodworking suppliers), it's usually been polymerized by heating. This polymerization causes the oil to dry quickly, without the use of metallic driers or solvents.

Unlike vegetable oils, walnut oil doesn't turn rancid and has a pleasant odor. It's easy to apply, but doesn't offer a lot of protection and requires frequent reapplication.

RAW LINSEED OIL. Raw (or pure) linseed oil is pressed from flax seed. Unlike boiled linseed oil, raw linseed oil contains no metallic driers or solvents. So although it's a drying oil, it will take much longer to dry. It imparts a warm color to most woods and is easy to apply.

TUNG OIL. Pure tung oil is extracted from the nut of the China wood tree. Unlike linseed oil, tung oil won't darken the color of the wood. It's a good choice for lighter colored woods, or when you want to show off the natural color of the wood. Tung oil also provides good water resistance.

Tung oil is used as the base for several commercial finishes that have added driers and solvents. These are usually labeled as "tung oil finishes," rather than pure tung oil. So be sure to check the label of the product before you buy.

MINERAL OIL. As a derivative of petroluem, mineral oil is a finish that's in a class of its own. It can't be classified as a natural oil, like the others I talked about. But it's completely safe for contact with food. And it's available at pharmacies and grocery stores, where it's sold as a laxative. You'll also find it in paint or hardware stores sold as butcher-block oil.

Mineral oil is a non-drying oil. It will remain "wet" long after it's applied. It's also odorless, colorless, and tasteless, so it's a good choice if you're concerned with the finish imparting a flavor to food.

BEESWAX. Produced by honey bees, beeswax offers a slightly more water-repellant finish than most oils. It can be melted and mixed with mineral oil or raw linseed oil to create a pleasant-smelling and easy-to-apply finish.

BLENDED FINISHES. Most of the finishes discussed so far are sold in a pure, unblended state. But you'll also find some commercial finishes that are simply a blend of mineral oil or wax, often mixed with a scented oil for fragrance.

▲ Food-safe finishes are also a good choice for use on toys for young children.

SALAD BOWL FINISH. A few finish manufacturers offer products labeled as "salad bowl finish." Only by reading the manufacturer's material safety data sheet (MSDS), can you know what's in these finishes. Most of them are primarily an oil/urethane mix. But they also contain solvents and some even contain metallic driers. However, the trade-off is that these finishes offer greater protection to the wood than the naturally derived finishes.

None of the food-safe finishes mentioned here offer the same level of protection as a traditional varnish or lacquer. But they're all fairly easy to reapply whenever necessary. (See the box below for information on how to rejuvenate a wood bowl.) And they may also offer something that other finishes don't — peace of mind. W

How-To: Restore a Wood Bowl

No matter which food-safe finish you choose, repeated washing and everyday wear and tear will eventually take a toll on the finish.

If you have a wood object that needs restoring, there are number of products that you can use to clean it. For a bowl that's badly stained or has mildew, you may need to sand the surface until you reach bare wood. And if there is a hardened finish on it, you'll need to use some wood stripper first.

But if the bowl is just a bit grungy, I like to use natural a cleaner like lemon juice or vinegar to cut through the grease and grime. Combine this with pumice and a nylon abrasive pad to remove the built-up grime and finish.

Once you have a clean, dry bowl, you can apply any one of the food-safe finishes mentioned above. Finally, to help extend the life of the finish, avoid putting the bowl in the dishwasher.

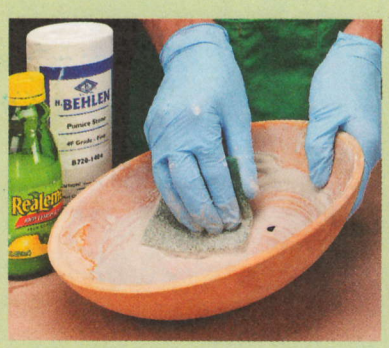

▲ Use a paste of pumice and lemon juice with an abrasive pad to remove oil and grime.

▲ After the bowl has dried, apply a fresh finish for a clean, new-looking bowl.

Before

After

Cock Beaded Drawers

This age-old technique offers a refined look while showing off your craftsmanship.

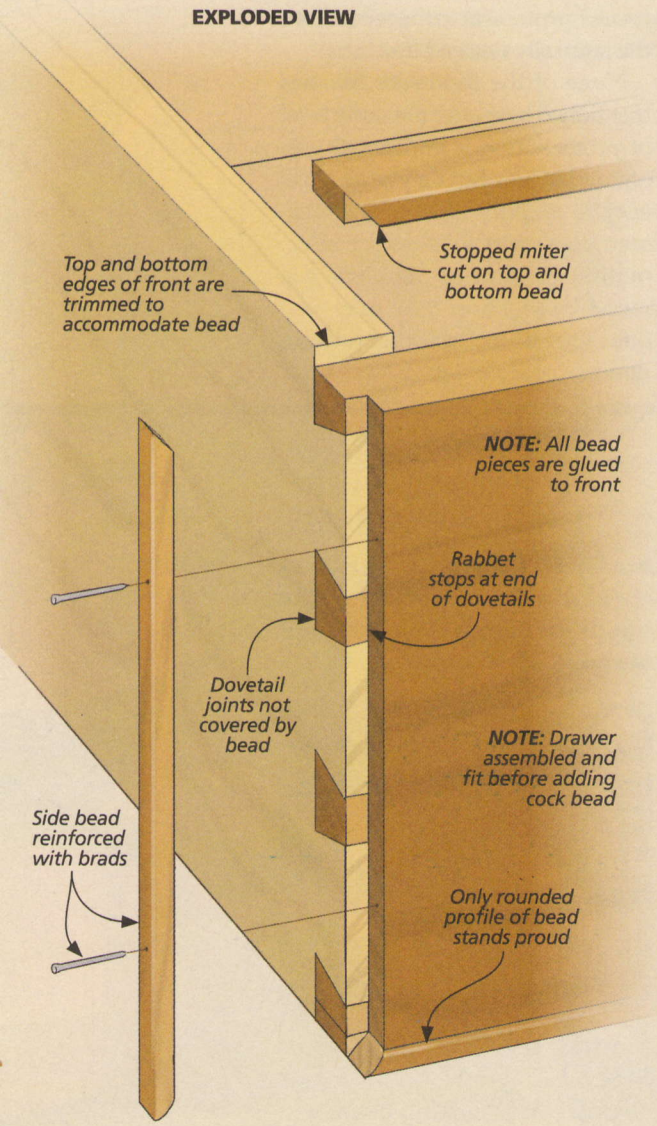

The chest of drawers on page 32 features cock bead (bead that stands proud of the surface) framing the drawer openings in the case. The applied bead adds pleasing depth and detail to the flat front of the case. In this instance, the beading was simply mitered to fit inside the drawer openings and then glued in place. This is a commonly used, tried-and-true method of adding cock beading to a project.

However, framing the case openings isn't the only way to incorporate this detail into a design. Another option is to wrap cock beading around the dovetailed drawer fronts. This technique offers virtually the same appearance.

WHY & WHEN? A couple of natural questions are: "Why choose one method over the other? And what are the pros and cons of each?" Of the two techniques, applying the cock beading to the drawer openings is initially easier. The beading is simply mitered to fit. However, the cock bead changes the size of the openings and this requires adding extra runners and kickers to the inside of the case.

When the cock bead is added directly to the drawer front, you avoid this extra work. And in my mind, the finely crafted look of a drawer front fitted with a narrow cock bead just can't be beat.

There are trade-offs. First, fitting the beading to a dovetailed drawer in this traditional way involves more finicky work. And second, the use of this technique is limited by the drawer height.

The beading applied to the sides of the drawer front will always run "cross-grain" to the front. A large amount of expansion or contraction across the front may cause the mitered corners of the beading to open or the beading to pop loose. For this reason, this technique is best used on drawer fronts no more than about 6" in height. This is one reason this technique wasn't practical for the chest of drawers.

But it never hurts to know more than one way to skin a cat. So I'll offer a quick lesson on adding cock beading to a dovetailed drawer.

HOW IT WORKS. A look at the exploded view drawing at left will give you a basic idea of what's involved. And the drawings on the opposite page fill in the details.

In a nutshell, the drawer front is rabbeted to hold the beading. Full-width beading is applied to the top and bottom of the drawer while narrower beading is fit to sides. This way, the attractive dovetail joinery is not covered over. The key to fitting the beading is cutting stopped miters on the ends of the top and bottom pieces.

GETTING STARTED. You start by building the drawer to fit the opening using half-blind dovetails. The beading is fit (let in) and installed after the drawer is assembled. And as I mentioned, the cock beading on the sides won't cover the dovetails. Also, keep in mind that once the beading is installed, you can't trim the drawer without affecting the appearance of the bead.

THE BEAD. The cock bead should fit flush to the perimeter of the drawer front. So before cutting the rabbets, you'll want to have the bead in hand. This allows you to size the rabbets accordingly.

For the best appearance, the bead should be fairly thin — 1/8" to 3/16" thick. Initially you can make all the bead the same width. The side pieces will be trimmed down at the time of fitting. The width of the bead is sized so that only the rounded profile stands proud.

"RABBET" THE FRONT. To make room for the bead, the top and bottom edges of the front are not actually rabbeted, but are trimmed through the entire thickness. The bead will fit flush to the inside face of the front and there will be no joint visible from above or below. The sides are simply rabbeted back to the ends of the dovetails.

Although there are a number of ways to remove the waste, my first choice is a straight bit in the router table. Figures 1 and 2 give you the idea. Start with the ends. This way, any chipout will be removed when you trim the top and bottom. You can use the drawer to adjust the height of the bit. The rabbet should stop at the ends of the dovetails. A test piece can be helpful to get the width of the rabbet right.

When trimming the top and bottom edges, I set the bit slightly low (1/32" to 1/16") to avoid cutting into the sides. The remaining thin edge can be pared away after routing.

FITTING THE BEAD. Now you're ready to miter the bead around the front. This just takes care. Since the top and bottom bead are wider, a stopped miter is required on these pieces, as shown in the Exploded View on the opposite page.

I like to work around the front, fitting each corner in order. Start by squaring up one end of the top piece. Set it in place and use the side rabbet to mark the end point of the miter, as shown in Figure 3.

You can use a simple miter block and a chisel to gradually pare the stopped miter. Just be careful to stop the miter cut at your mark.

Next, with the side bead pieces trimmed to width, use the miter block to pare a mating miter on a side piece. Then move to the corner below and repeat the process.

You want to fit all the pieces before attaching any of the bead. And when ready, the bead can be glued and clamped in place. Finally, I like to reinforce the "end grain" joints between the side pieces and the drawer front with brads. This ensures all that fine work will hold up for a lifetime and more. W

How-To: Make Beaded Drawers

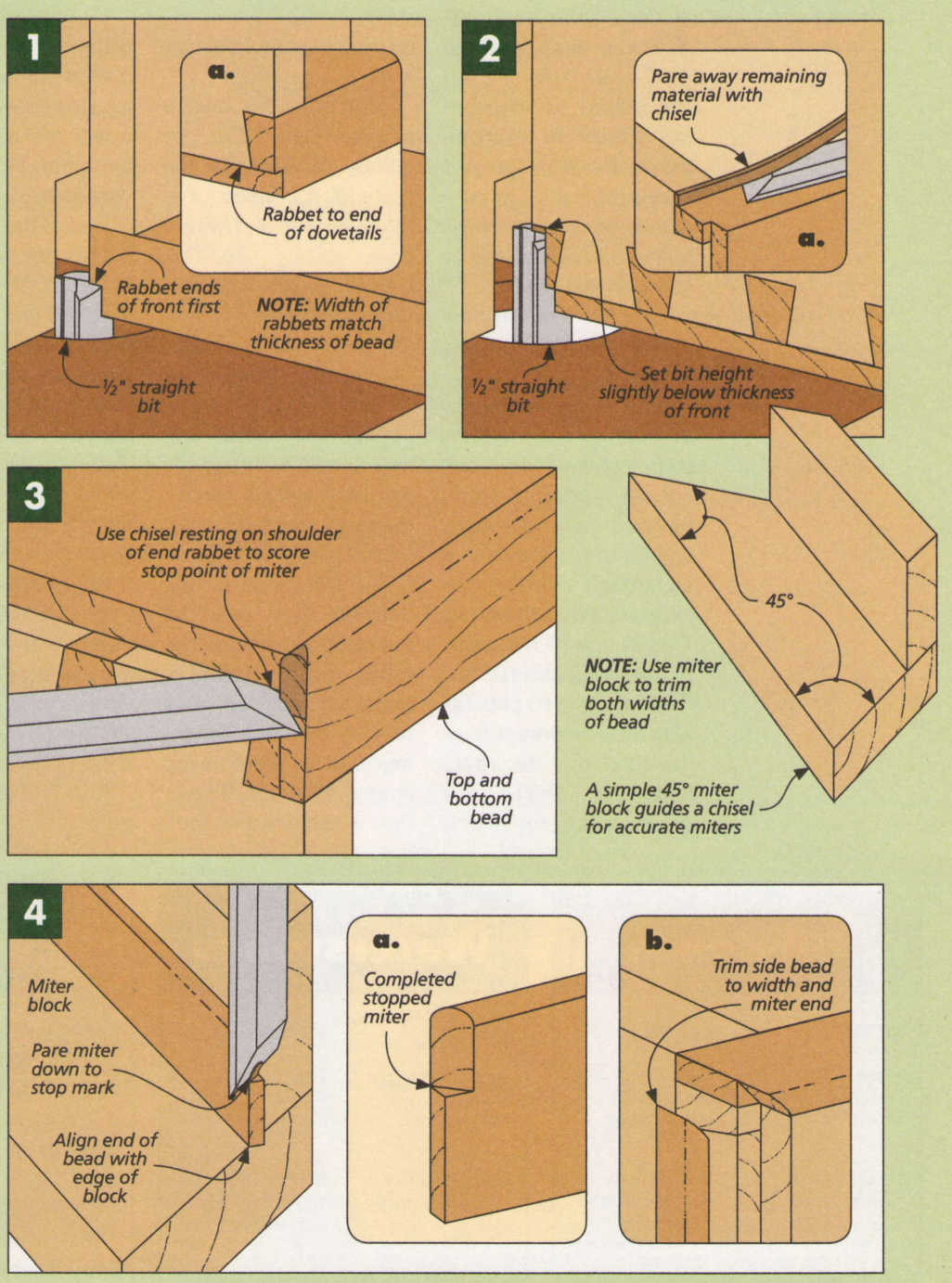

Questions & Answers

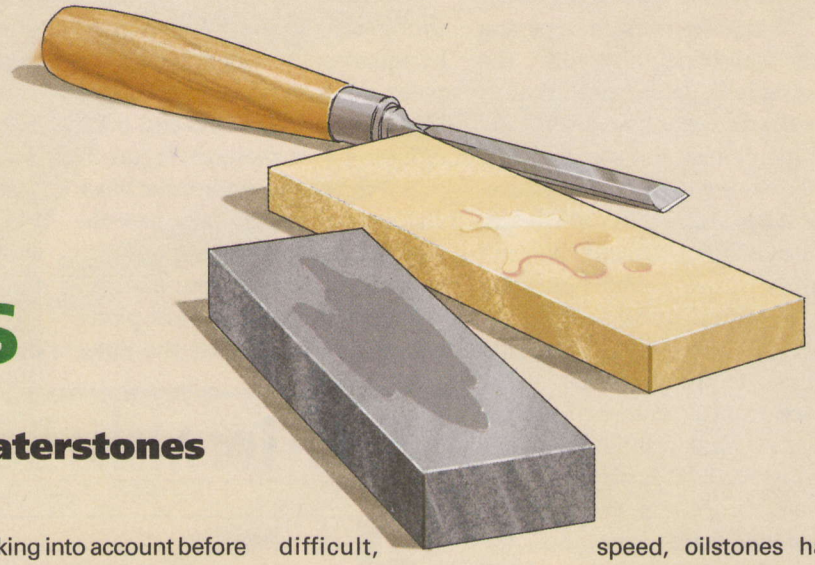

Oilstones vs. Waterstones

Q ***I've been thinking of switching from sandpaper to sharpening stones to sharpen my tools. But I'm not sure which way to go – waterstones or oilstones? Is there an advantage to one over the other?***

Don Michels
LaPorte, Indiana

A In terms of sharpness, both waterstones and oilstones will put a keen edge on a tool. But generally speaking, waterstones have the advantage of doing the job quicker than oilstones. This is one of the main reasons why waterstones have become so popular with woodworkers over the past few decades. However, there are some other factors worth taking into account before making a decision.

FRESH EDGE. The reason a waterstone cuts so quickly is because the material it's made of is relatively soft and breaks down during use. This causes fresh abrasive particles to be continually exposed. It's almost like using a fresh piece of sandpaper on every stroke. The faster cutting speed is especially apparent when sharpening harder tool steels (like A2 or D2 steel).

The downside is that because they wear so quickly, waterstones can easily become dished or hollowed out. So they require frequent flattening to keep them in top shape. Although flattening a waterstone isn't difficult, it does mean you'll have to stop sharpening for a few minutes to flatten the stone before getting back to work.

One of the other drawbacks to waterstones is that the coarse and medium grit stones typically require soaking in water for approximately 10-20 minutes before each use. (For man-made waterstones, you can avoid soaking by simply storing the stones in a container of water.)

LOW MAINTENANCE. In contrast to waterstones, oilstones cut a bit slower. This is because unlike a waterstone, the surface of an oilstone doesn't wear away as quickly.

So while you don't get quite the same cutting speed, oilstones have one distinct advantage — they don't require nearly as much maintenance. In fact, you can use an oilstone for years without ever having to flatten it once.

MAKING A DECISION. Since there isn't much difference in cost, it really boils down to a matter of personal preference. If you have the opportunity, I'd suggest trying each type to see which you prefer. (Try borrowing some different stones from fellow woodworkers.)

Once you've made a choice, my advice is to stick with it. It takes some practice to really get a feel for how a stone sharpens. With continued use, your results will improve over time. W

Oilstones

pros	cons
More durable, little or no flattening needed	Cut slower, so sharpening takes longer
No chance of rusting tools	Surface can become glazed if used dry

Waterstones

pros	cons
Faster cutting for less time sharpening	Wear quickly, frequent flattening needed
More effective on harder grade steels	Stones require soaking in water before use

Do you have any questions for us?

If you have a question related to woodworking techniques, tools, finishing, hardware, or accessories, we'd like to hear from you.

Just write down your question and mail it to us: Woodsmith Q&A, 2200 Grand Avenue, Des Moines, Iowa 50312. Or you can email us the question at: woodsmith@woodsmith.com.

Please include your full name, address, and daytime telephone number in case we have questions.

Sources

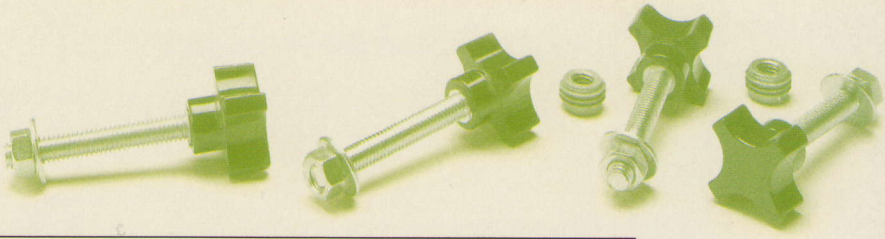

GLUE GUNS

Inexpensive glue guns are available at just about any hobby store or hardware store. The *Titebond HiPURformer* glue gun shown on page 9 is available through several woodworking suppliers shown in the margin at right.

BELT SANDERS

The graphite platen material shown in the belt sander article on page 10 is available from *Woodworker's Supply*.

MINI-DOVETAIL JIGS

The *Porter-Cable Miniature Dovetail Template Kit* (4215) is available from most tool dealers that carry *Porter-Cable* products. The *Rockler* template (20618) is available through *Rockler*.

BAND SAW BLADES

The *Wood Slicer* resaw blade is sold by *Highland Woodworking*. *Lenox Woodmaster CT* blades are available from a number of online sources. Or you can locate a dealer in your area by visiting the *Lenox Tools* website.

CHISEL RACK

A few screws are the only hardware needed for the chisel rack on page 16. To finish the rack, we simply wiped on a coat of *General Finishes' Seal-a-Cell*, followed by a couple of coats of lacquer.

MIRROR FRAME

You'll need just a few items to build the mirror frame on page 20. The glass retainers came from *Rockler* (92289). And to hang the mirror, we used some heavy-duty D-rings and picture frame wire. You can find these at most hardware stores and home centers.

To make the bead molding, we used an *Amana* bullnose bit (51558). And for a finish, we applied two coats of lacquer.

HEADBOARDS

For the headboard on page 24, you'll need some turn buttons (27912) and taper connectors (28878). These are available from *Rockler*. The rattan material used in one of the panels is also carried by *Rockler* (41079).

The cherry headboard was stained with a mix of three parts *Zar* cherry stain and one part *Wood Kote Jel'd-Stain (Cherry)*. The rattan panel headboard was stained with *General Finishes' Gel Stain (Java)*. And the fabric panel headboard was painted with *Benjamin Moore's Cream Cloak* (OC-135).

CHIPPENDALE CHEST

Hardware is an important element of the chest of drawers on page 32. The rosette pulls (H-31) and keyhole escutcheons (H-14) came from *Horton Brasses*. The nylon stem bumpers were purchased from *Rockler* (28373).

The profile around the top of the chest was routed with an *Amana* thumbnail and bead bit (49560). For the paper-backed veneer and contact cement, we turned to *veneersupplies.com*.

To finish the chest, we used a two-step staining process. This starts with a coat of *Old Masters' Dark Mahogany Gel Stain*. When that was dry, we sprayed on a coat of lacquer (glossy). Next, a stain mixture made up of 1 cup of *Old Masters' Deep Red Rich Mahogany Penetrating Stain* and 1 qt. of *Dark Mahogany Gel Stain* is applied. After this was dry, we applied a couple more coats of lacquer (satin). W

Online Customer Service

Click on *Magazine Customer Service* at **www.woodsmith.com**

- Access your account status
- Change your mailing or email address
- Pay your bill
- Renew your subscription
- Tell us if you've missed an issue
- Find out if your payment has been received

MAIL ORDER SOURCES

Project supplies may be ordered from the following companies:

Woodsmith Store
800-444-7527
Amana Bits, Glass Retainers, Mini Dovetail Templates, Stem Bumpers, Taper Connectors, Turn Buttons

Amazon
amazon.com
HiPURformer Glue Gun, Porter-Cable Dovetail Template

General Finishes
generalfinishes.com
Gel Stains, Salad Bowl Finish, Seal-a-Cell Finish

Highland Woodworking
800-241-6748
highlandwoodworking.com
Wood Slicer Blades

Horton Brasses
800-754-9127
horton-brasses.com
Chest Hardware

Lenox Tools
lenoxtools.com
Woodmaster CT Blades

Rockler
800-279-4441
rockler.com
Glass Retainers, HiPURformer Glue Gun, Rattan, Rockler Dovetail Template, Stem Bumpers, Taper Connectors, Turn Buttons

Veneer Supplies
veneersupplies.com
Better Bond Titan DX Premium Contact Cement, Paper-Backed Veneer

Wood Kote
woodkote.com
Jel'd Stains

Woodcraft
800-225-1153
woodcraft.com
HiPURformer Glue Gun

Woodworker's Supply
800-645-9292
woodworker.com
Graphite Platen Material

Keep It All Organized !

Woodsmith Binders

As you build your *Woodsmith* library, here's a way to keep your issues organized. Each binder features durable vinyl covers and easy-to-read perforated number tags. Snap rings with a quick-open lever make it easy to insert and remove issues. And there's an extra pocket inside for storing notes. Each binder holds a full year (6 issues) of *Woodsmith*.

Visit **Woodsmith.com** to order or call **1-800-444-7527**.

***Woodsmith* Binder**

❍ **WB** (*Holds 6 issues*).....$12.95

looking inside

Final Details

▲ *Chisel Rack.* A shop project doesn't have to be all business. This easy-to-build chisel rack offers practicality with style. You'll find plans beginning on page 16.

▲ *Frame & Panel Headboard.* When a wall-mounted headboard looks this good, why build an entire bed? Best of all, you can choose from three design options. Make your selection starting on page 24.

▼ *Chest of Drawers.* Traditional construction methods and design details make this heirloom chest a true classic. Turn to page 32 and take a look.

▲ *Mirror Frame.* Simple styling and building techniques allow the beauty of the wood to stand front and center. Easy-to-follow plans start on page 20.